ENGLISH

2014 INSTALLATION GUIDE

TREX® DECKING AND RAILING

decking & railing

TREX TRANSCEND® DECKING & RAILING

The ultimate expression of beauty and function joins forces with unsurpassed fade and stain resistance

TREX ENHANCE® DECKING

All the beauty (and none of the bother) of real wood

TREX SELECT® DECKING & RAILING

Easy design scheme brings accessible luxury right to your doorstep

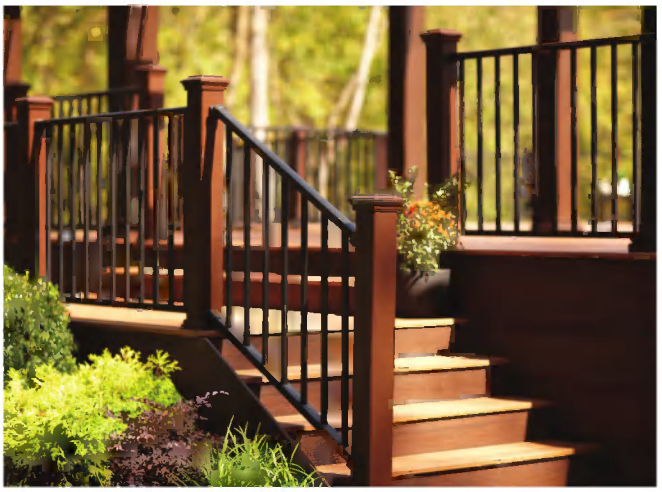

TREX REVEAL® ALUMINUM RAILING

A sleek yet sturdy profile specially crafted to complete your deck while emphasizing the view beyond it

ON THE COVER
decking: Transcend® in Spiced Rum
railing: Trex® posts in Classic White and Transcend in Vintage Lantern with a Tree House cocktail rail and round aluminum balusters

ALSO AVAILABLE
TREX® ADA HANDRAIL
Complementary and compliant

Trex® Installation Guide

In your hands, you're holding everything you need to begin building with Trex® decking and railing. This step-by-step guide will show you how to create a beautiful outdoor living space that fits perfectly into your or your client's lifestyle.

Trex has been proven in the field. After more than twenty years of unparalleled performance, it offers warm, natural beauty and inviting comfort that no other product can match. Maybe that's why Trex is asked for by more customers than any other brand in the business.

TREX® INSTALLATION GUIDE

CONTENTS

SECTION ONE: General Information

General Tips 6
Trex CustomCurve® (Bending Trex) 6
Job Site Storage 6
Safety 7
Tools 7
Care and Cleaning 8
Mold Technical Bulletin 11
Painting Technical Bulletin 12
Physical and Mechanical Properties 13
Glossary of Terms 16

SECTION TWO: Planning Ahead

Trex® Decking 19
Railing (Including ADA Handrail) 19
Trex® Lighting 19
Trex® RainEscapes® Drainage System 19
Installing Hot Tubs, Planters, and Seating 19
Installing Fireplaces and/or Fire Pits 19
Installing a Pergola 20
Installing a Trex Spiral Staircase 20
Special Patterns 20

SECTION THREE: Lighting

Lighting Specifications and Profiles 22

How to Install Trex® DeckLighting™

Parts List/Tools Needed 24
Lighting and Wiring Overview 24
General Information 25
Planning 25
Installing Wiring 25
Making Connections 25
Installing Post Cap Lights 26
Installing Deck Rail Lights 26
Installing Riser Lights 27
Installing Recessed Deck Lights 27

How to Install Trex® LandscapeLighting™

Parts List/Tools Needed 28
How to Install Trex Well Light, Path Lights, and Wall Washlight 29
How to Install Trex Spotlight 30

SECTION FOUR: Decking

Decking Specifications and Profiles 33
Trex Hideaway® Hidden Fastening System 34
Decking Fasteners 35
Framing and Fastening Tips 37
Dock Applications 37
Rooftop Decks and Sleeper Systems 38
Code Compliance 39
Gapping 40
Stairs 41

How to Install Decking

Tips for Installing a Trex Hideaway® Hidden Fastening System (Stainless Steel or Universal) 42
How to Install Trex Hideaway Stainless Steel Fasteners 43
How to Install Trex Hideaway Universal Hidden Fasteners 44
How to Install Trex Escapes® Boards with Trex Hideaway Universal Fasteners 45
How to Replace Trex® Boards 45
Installed with Stainless Steel Fasteners 45
Installed with Trex Hideaway Universal Fasteners 45
How to Install Stair Treads 46
How to Install Trex Transcend® Porch Floorboards 47
How to Install Porch Stair Treads 48
How to Install Post Mounts on Deck Board 49
How to Install Post Mounts on Concrete 50

SECTION FIVE: Railing

Trex Transcend® Railing Specifications and Profiles 53
Trex Transcend Railing Systems 54
Reveal® Aluminum Railing Specifications and Profiles 55
Trex Select® Railing 56
Traditional Railing Specifications and Profiles 57
ADA Railing Specifications and Profiles 58

Trex Transcend® Railing

Parts List 59
Determing Balusters Needed 59
Trex Transcend Railing Styles 60
How to Install Standard Crown or Beveled Railing 61
How to Install Classic Railing 63
How to Install Colonial Railing 64
How to Install Round or Square Aluminum Balusters 65
How to Install Standard Glass Panel - Crown or Beveled 67
How to Install Classic Style Glass Panel Railing 68
How to Install Colonial Style Glass Panel Railing 70
Customizing Your Railing 73
How to Install On-An-Angle Railing 73
How to Install Bird's Mouth Railing 74
How to Install Crown, Universal, and Beveled Stair Railing 76
How to Install Foot Blocks 78

Trex Reveal® Railing
Parts List 79
Determining Balusters Needed 79
Bracket Hardware - Horizontal Applications 80
Bracket Hardware - Stair Applications 81
Location and Installation of Posts 83
Railing Configurations 83
How to Install Horizontal Railing 86
How to Install Horizontal Swivel Brackets 92
How to Install Horizontal Swivel Railing 93
How to Install Foot Blocks - Horizontal Railing 95
How to Install Stair Posts and Stair Railing 96
Attaching Stair Brackets 97

Trex Select® Railing
Parts List 104
Determining Balusters Needed 104
How to Install Trex Select® Railing 105
How to Install Trex 45 Degree Adaptor 108
How to Install Trex Select Stair Railing 109
How to Install Trex Select Railing Foot Blocks 112
How to Install Trex Select Foot Block for Stair Railing 113

Trex Traditional Railing
Parts List 114
Traditional Railing Styles 115
How to Install Raised Railing - Standard Balusters/ Option 1 116
How to Install Raised Stair Railing/Option 1 117
How to Install Raised Railing - Round Aluminum Balusters/Option 2 118
How to Install Raised Stair Railing/Option 2 120
How to Install Raised Railing - Architectural Balusters/Option 3 122
How to Install Raised Stair Railing/Option 3 124
Installing Foot Blocks 124

Trex ADA Railing 125

SECTION SIX: Warranties
Trex Transcend®, Enhance®, Select®, and Fascia Limited Fade and Stain Warranty 130
Trex Limited Warranty 133
Trex Reveal® Warranty 135

Color Palette ..... Inside Back Cover

This symbol indicates text continues to next page.

NEED HELP?

Trex provides a variety of valuable resources to answer your questions or concerns. For additional assistance, check out:

» **Trex.com**
Here you will find a wealth of useful information on Trex's extensive product portfolio, installation and care and cleaning instructions and videos, technical help and FAQs. You'll also find inspiring photos of deck projects, steps to help you plan and start your project and tips on selecting the right deck builder. At **trex.com**, you can request information, register your warranty and reach out to customer service representatives who can answer even more questions.

» **Social Networks**
Share and discuss your Trex project on our social media sites. Join the conversation on **Facebook** (TrexCompany), **Twitter** (Trex_Company), **Pinterest** (trexcompany), **YouTube** (TheTrexCo) and **LinkedIn** (Trex Company).

» Check out the Trex blog at **http://www.trex.com/inspiration/blog** where you'll find articles to inspire you, inform you and help answer your questions. We'd love to hear from you so leave a comment when you stop by.

» Call **1-800-BUY-TREX (1-800-289-8739)** and speak to a live technical support representative who can answer your questions.

» Email your question or concern to **question@trex.com** and we'll get back to you quickly.

From time to time, Trex revises its installation instructions. To ensure you have the most up-to-date installation instructions, please visit *trex.com*.

GENERAL TIPS

- Most colored chalk lines are permanent. **Use baby powder or Irwin Strait-Line®* Dust-Off Marking Chalk available at *Irwin.com***
- We **DO NOT** recommend sanding. Sanding will change the appearance of the surface of Trex® material and **will void the warranty with respect to any condition caused by such sanding.**
- When drilling large or deep holes, periodically lift the bit out of the hole to remove the shavings.

- Throughout this guide, feet are converted to meters and inches to centimeters.
- If you want to minimize the appearance of joists through the spaces between boards, paint the top of your joists black.
- Trex® decking and railing is suitable for a wide range of applications. It is not intended for primary structural members such as load bearing columns, joists, stringers, and beams. For information on Trex Elevations® Steel Deck Framing, see *trex.com*.
- Construction methods are always improving. Please make sure you have the most up-to-date installation instructions by visiting *trex.com*.

Trex® CustomCurve®
HEATING & BENDING SOLUTION

Trex is the first brand to have a bending solution exclusively for contractors, giving you the ability to create those unique, showpiece decks that are unmistakably Trex.** For more information, visit *trexpartners.com*.

NOTE: *Trex Transcend® Porch boards cannot be bent.*

ALWAYS GREEN: Trex decking is made of 95% recycled materials, including plastic film, reclaimed wood, and sawdust.

JOB SITE STORAGE

Remember when storing Trex decking, railing, and trim:

- You must store Trex outdoor-living products on a flat and level surface. Adjust support blocks accordingly.
- You must support Trex products with dunnage when placing bundles.
- When stacking Trex products, supports should start at each end and be spaced 2′ (0.61 m) on center. Supports should line up vertically.
- **DO NOT** stack Trex higher than six bundles (units) or 12′ (3.7 m) high.
- **Cover material on site until you are ready to install it.**

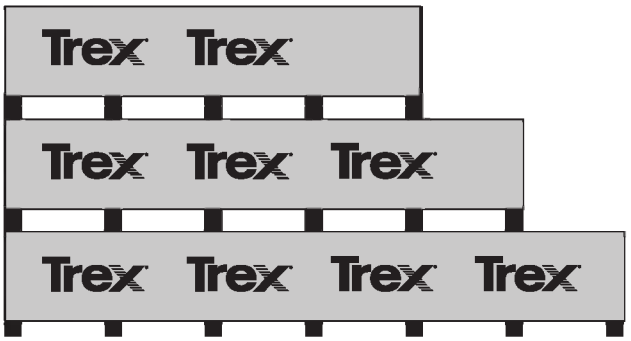

Units of Trex lumber on level ground.

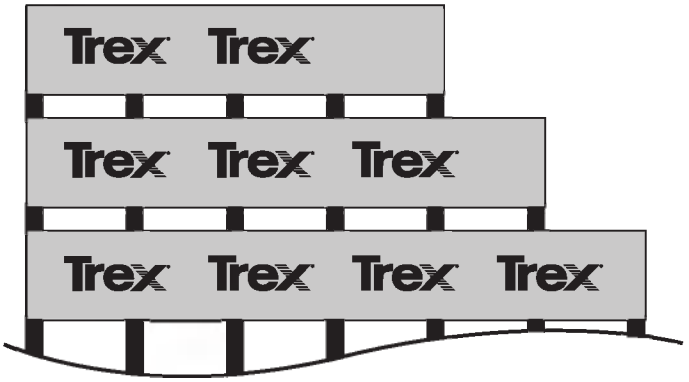

Units of Trex lumber on uneven ground.

*Strait-Line® is a registered trademark of Irwin Industrial Tool Company.

**Trex® CustomCurve® is manufactured and distributed by Curvelt, LLC. Trex® and CustomCurve® are trademarks of, and are used by Curvelt, LLC under a license with, Trex Company, Inc.

SAFETY

When working on any construction project, you should wear protective clothing and safety equipment. Wear safety glasses, gloves, a dust mask and long sleeves, particularly when cutting in confined spaces.

Trex decking and railing are heavier and more flexible than wood. **DO NOT** try to lift the same quantity of Trex boards as you would traditional lumber. Go to *www.trex.com* for Material Safety Data Sheets (MSDS).

TOOLS

You can create intricate shapes, profiles, and patterns with Trex. Most installments require no special tools. For best results, use carbide-tipped blades and router bits.

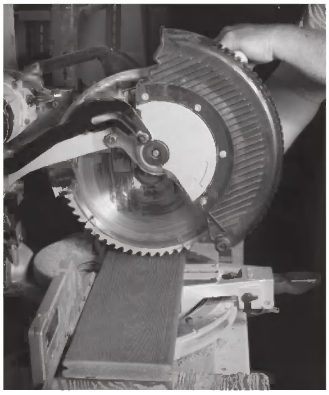

When using a miter saw, we recommend using the Trex® Blade™. This comes in 3 different sizes and is ideal for cutting all our decking and railing products (these are not recommended for cutting Trex Elevations®). *Refer to www.trex.com for more information.*

Install Trex recommended fasteners with standard power drills.

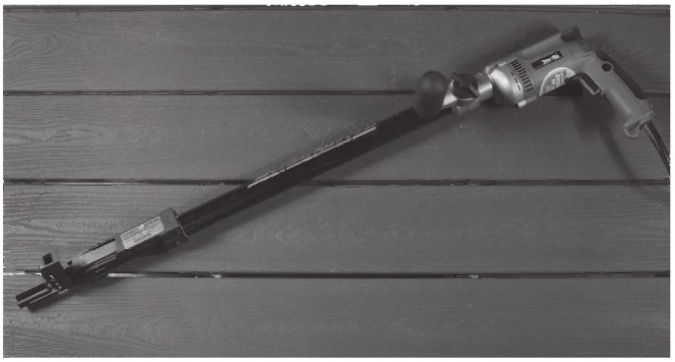

Screw guns provide a quick and easy way to fasten Trex.

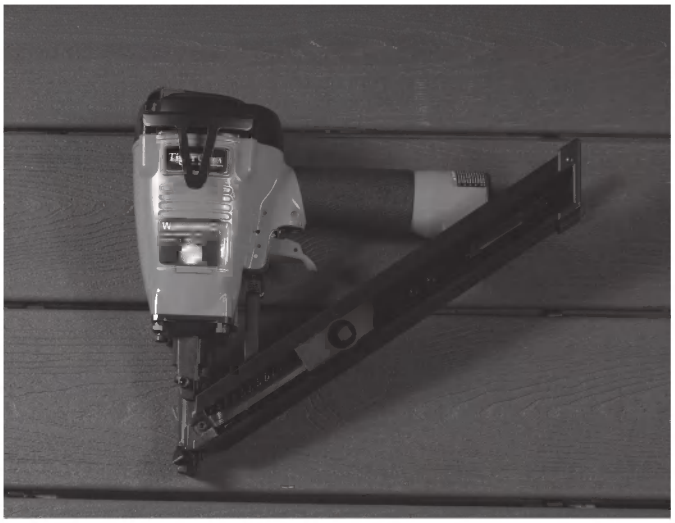

The pneumatic gun by Tiger Claw®* is designed to dramatically decrease the time it takes to install a deck. Strong, lightweight, and durable, the gun uses Trex Hideaway® fasteners. Trex Gun Pail includes 900-count connector clips and TC-SG collated pneumatic screws.

Trex routs beautifully to give extremely crisp edges. The groove cutter/router bit is used with the Trex Hideaway fastener system.

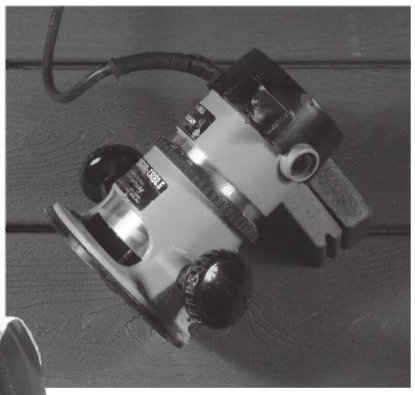

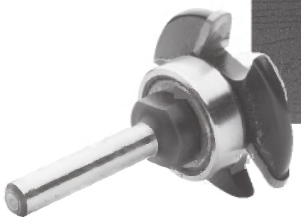

⚠ CAUTION

DO NOT rout balusters. Routing will change the surface of Trex products.

**Tiger Claw® is a registered trademark of Tiger Claw, Inc.*

TREX TRANSCEND® (DECKING AND RAILING)/TREX ENHANCE®/ TREX SELECT® (DECKING AND RAILING) CARE AND CLEANING GUIDE

All exterior building materials require cleaning. Generally, soap and water is all that is required to clean Transcend, Enhance, and Select products. *For additional information, see below.*

PROBLEM	SOLUTION
Dirt and Debris	The affected area should be sprayed off with a hose to remove surface debris. Use warm soapy water and a soft bristle brush to remove dirt and debris from the embossing pattern.
Chalk Lines	High permanence chalk lines may discolor the surface. Use only Irwin Strait-Line®* Dust-Off Marking Chalk (purple), available at *Irwin.com*
Tannins Due to Debris	Remove all debris from the deck using a hose or broom. Once the deck surface is dry, apply a "deck brightener"** to the deck as directed by the manufacturer. Deck brighteners contain oxalic acid, which will remove tannins.
Ice and Snow	A plastic shovel may be used to remove snow from the deck. Use calcium chloride or rock salt to melt the snow and ice from the deck surface.
Oil/Grease/Food	All food spills should be removed as soon as possible. **The surface must be cleaned within seven days to maintain the stain warranty.** To remove, spray off with a hose and use warm, soapy water and a soft bristle brush to remove spills from the embossing pattern.
Mold and Mildew	If debris such as pollen and dirt is allowed to remain on the deck surface, mold can feed on the biofilm. Using a hose and warm, soapy water with a soft bristle brush is recommended to remove the food source and mold.
Using a Pressure Washer (Concrete, Stucco, or Ground-in Construction Dirt)	A pressure washer with no greater than 3100 psi***** that has a fan attachment/ adjustment and soap dispenser may be used to remove dirt, concrete dust, or other types of construction dirt. Spray deck with soap, and then follow by gently scrubbing each deck board with a soft bristle brush. Spray/rinse each individual deck board using fan tip no closer than 8" from the decking surface. RINSE THOROUGHLY. If dirty water from cleaning is left to dry, this will cause a film to remain on the decking surface.
Rust	Apply a "deck brightener"** to the deck as directed by the manufacturer. Deck brighteners contain oxalic acid, and will remove the rust stains
Maintaining Transcend® or Select® railing	**NEVER** use acetone or other solvents on Trex Transcend or Select railing. For color transfer issues (from attachment of baluster spacer), use Mr. Clean®, Magic Eraser® Original*** or Magic Eraser® Extra Power to help remove this. For small surface scratches, marks, or scuffs, use Dupli-Color Scratch Seal® Clear Sealer Pen. ****

**Strait-Line® is a registered trademark of Irwin Industrial Tool Company.*

***Use of products containing bleach or acid may lighten the underside or cut areas of the Trex Transcend/Enhance/Select decking.*

**** Mr. Clean® and Magic Eraser® are registered trademarks of The Procter and Gamble Company.*

*****Scratch Seal® is a registered trademark of The Sherwin-Williams Company.*

******Use of a pressure washer greater than 3100 psi could damage the boards and void the warranty.*

NOTE: *Refer to www.trex.com to view a general care and cleaning video for Transcend, Enhance, and Select decking.*

TREX DECKING AND RAILING GENERAL CARE AND CLEANING GUIDE
(EARLY GENERATION COMPOSITE AND PVC)

All exterior building materials require cleaning. Trex recommends periodic cleaning with soap and water (for general dirt and debris) or a commercially available deck cleaner twice a year (for stains or mold/mildew). *For additional information, see below.*

PROBLEM	SOLUTION
Dirt and Debris	Clean deck to remove dirt and debris. Soap and hot water is all that is needed.
Chalk Lines	Most colored chalks are permanent. For Trex use either baby powder or Irwin Strait-Line®* Dust-Off Marking Chalk available at *Irwin.com*
Visible Printing	The printing on the side of Trex decking boards are required by building codes. With careful installation, most printing can be hidden. Visible printings can be lightened with acetone.
Water Spots, Leaf Staining and Wood Tannins	Tannin leaching occurs naturally in Trex and all wood-based products. Allow for at least 12 weeks of normal weathering. This process may be hastened through the use of a product containing oxalic or phosphoric acid, commonly known as Deck Brightener.**
Ice and Snow	Calcium chloride or rock salt, available in many home centers, will melt ice on Trex decking. Rinse off when first practical. Use caution when removing snow or ice with a snow shovel, and **NEVER** use a metal snow shovel on a Trex deck. A shovel may scratch the deck, which is **not covered under warranty.**
Scuffs and Abrasions	Scuffs and abrasions can fade or disappear naturally after 12 - 16 weeks of weathering. This can be accelerated with a product containing oxalic or phosphoric acid, also known as Deck Brightener**.
Rust Stains, Ground-In Dirt and Grime and Pigment Staining	Use a cleaning product containing oxalic or phosphoric acid base, also know as Deck Brightener, to lighten or remove rust or dirt. Product may need to sit on the stain for 10 - 15 minutes before rinsing.**
Oil/Grease/Food	Rinse the stain with hot water as soon as possible. Use Pour-N-Restore®*** (*pour-n-restore.com*) as directed for any remaining stain. (Test in a small area first as Pour-N-Restore may remove some of the colorant from the decking surface.)
Mold and Mildew	Semi-annual (spring and fall) cleaning of your deck is important to prevent buildup of pollen and other debris that can support the growth of mold. Refer to Mold Technical Bulletin for specific cleaning recommendations.** ***NOTE:*** *Trex Escapes® can be effectively cleaned by using a hose and warm, soapy water with a soft bristle brush.*
Using a Pressure Washer	Trex does not recommend the use of a pressure washer. The use of a pressure washer on deck surface could damage the decking surface and **will void the warranty on standard composite and PVC products with respect to any condition caused by the pressure washing.**
Sanding	Trex does not recommend sanding. Sanding will change the appearance of the surface of Trex material and **will void the warranty with respect to any condition caused by such sanding.**
Disposal	Trex decking and railing products should be disposed with normal construction debris or household waste. **DO NOT burn Trex products.**

**Strait-Line® is a registered trademark of Irwin Industrial Tool Company.*

***Use of products containing bleach or acid will lighten the surface of Trex. Use in an inconspicuous area to determine whether you like the effect. Neither product will affect the structural integrity of Trex.*

**** Pour-N-Restore® is a registered trademark of Edgewater Industries.*

NOTE: *Trex does not recommend the placement of rubber or vinyl materials such as those in grill mats, rubber-backed welcome mats, vinyl or PVC potted containers, etc., on the surface of Trex Escapes® for extended periods of time. Over time, additives in the rubber and PVC products have a tendency to migrate from these materials to Trex Escapes, resulting in discoloration of the surface.*

NOTE: *Refer to www.trex.com to view a general care and cleaning video for early generation composite decking such as Accents decking.*

TREX REVEAL® RAILING CARE AND CLEANING GUIDE

Maintaining the appearance of your Trex Reveal railing is important. The occasional wash is recommended as over time your Reveal railing may show signs of weathering as a result of exposure to the elements. The frequency of cleaning will depend on the environment and exposure to various types of elements.

For installations where the atmosphere is influenced by bodies of salt water or other contaminant conditions, cleaning is required every 6 to 9 months. Failure to adhere to the required cleaning guidelines will void the Trex Limited Warranty with respect to any condition resulting from such failure. For purposes of any warranty claim, you should retain documentation of the cleaning date, cleaning method used, brand and amount of chemical used, and invoice from cleaning company (or a receipt for chemicals used).

Regular cleaning may minimize the effects of weathering and remove dirt, grime and other build-up.
The best method of maintaining the appearance of your Reveal railing is to occasionally wash it using a solution of warm water and a non-abrasive, pH neutral detergent solution. The railing surface should be thoroughly rinsed after cleaning to remove all residues. Use a soft white cloth, sponge or a soft bristle brush.

DO NOT clean Trex Reveal railing with solvents such as thinners or solutions containing chlorinated hydrocarbons, esters or ketenes.

The following cleaners are recommended for cleaning Trex Reveal railing:
» Formula 409® Cleaner Degreaser/Disinfectant*
» Spray Nine® Cleaner/Disinfectant**
» Simple Green® All Purpose Cleaner***
» Fantastik® All Purpose Cleaner****
» Windex® Cleaner*****

** Formula 409® Cleaner Degreaser/Disinfectant is a trademark of Clorox Company.*

*** Spray Nine® All Purpose Cleaner/Disinfectant is a trademark of Illinois Tool Works Inc.*

**** Simple Green® All Purpose Cleaner is a trademark of Sunshine Makers Inc.*

***** Fantastik® All Purpose Cleaner is a trademark of SC Johnson & Son Inc.*

****** Windex® is a trademark of SC Johnson & Son Inc.*

MOLD TECHNICAL BULLETIN

Mold is a lower form of plant life that can settle and grow on any surface, including Trex® decking. Mildew is a form of mold that grows on damp surfaces.

Mold spores, transported by air, insects, animals, and water, are similar to seeds, but you can't see them until colonies form. Because mold adapts easily to its environments and has a large number of species, it is hard to control and impossible to eliminate totally. But it will not affect the structural performance of Trex decking.

To form visible colonies, mold needs food, moisture, and temperatures between 40° - 90°F (4°C - 32°C). Trex decking is not itself a food source but spilled dirt and debris from flowerpots and gutters can nourish mold. If the gaps between deck boards are too small or clogged, the decking can also supply moisture.
Refer to gapping instructions on page 40.

How to Remove Mold from Trex Early-Generation Composite and PVC Decking

All exterior building materials require cleaning. Trex is no exception. Periodic cleaning of Trex decking will remove dirt and pollen that can feed mold. If mold colonies appear, clean the deck with a commercial deck wash containing a detergent and sodium hypochlorite (bleach). The chemical will remove the mold but also lighten the wood. In some cases, it will take several treatments to remove the mold colonies. Even if the spots are no longer visible, mold spores that could re-grow may still be on the surface.

The following brands of deck cleaners are effective in removing mold:

» Olympic® Premium Deck Cleaner*
» Expert Chemical™** Composite Deck Cleaner and Enhancer (*expertchemicalinc.com*)

Always apply these products to a dry deck. Applying them to a wet deck will significantly reduce the bleach's effectiveness. **NEVER** mix any other cleaners (ammonia, phosphoric acid, etc.) with bleach.

» For a non-chlorine based alternative, you can use UltraMean®,*** but you must scrub the deck with a soft brush immediately after you apply the cleaner.

Mold spreads easily and may return in some environments despite proper cleaning and preventative measures. Mold does not damage Trex and will cause no structural harm.

How to Remove Mold from Trex Transcend®, Trex Enhance®, and Trex Select® Decking

If you allow debris such as pollen and dirt to remain on the deck surface, mold can feed on the biofilm. Use a hose and warm soapy water with a soft bristle brush to remove the food source and mold.

** Olympic® is a registered trademark of PPG Architectural Finishes, Inc.*

*** Expert Chemical™ is a trademark of Expert Chemical, Inc.*

**** UltraMean® is a registered trademark of Rhino Hide.*

PAINTING TECHNICAL BULLETIN

Can Transcend®, Enhance®, or Select® decking be painted?

Trex Transcend, Trex Enhance, and Trex Select decking cannot be painted or stained.

Can Transcend® railing or Select® railing be painted?

Only Trex Transcend white railings can be painted as well as Select railing (which only comes in white). A high quality fast-dry alkyd primer should be used as a base coat, with oil or water-based exterior trim paint. Only light colors should be used. No darker colors such as Black, Brown, Forest Green, as these darker colors may draw excessive heat and damage the material. Surface abrasion may promote better paint adhesion. Use something such as an abrasive pad or steel wool to dull/buff the surfaces to be painted.

- Clean surfaces with Acetone, Isopropyl alcohol, or denatured alcohol before painting.
- **NEVER** use ketones (MeK, MiBk) or xylene as surface conditioners.
- Allow all surfaces to dry completely before painting.

Can Reveal® railing be painted?

Reveal railing should not be painted unless there are issues with scratches that may need to be repaired. If railing is scratched, use Trex Reveal Railing Touch-up Color Matched paint or to address smaller imperfections, use Trex Reveal Touch–up Color Matched Pens.

Can early-generation Trex composite decking and railing be painted? (Trex Accents® and Origins®, Trex Designer® and Traditional Railing)

Yes, you can paint or stain early-generation decking or railing to achieve a custom color, but it is not necessary for protection. Paints and stains that adhere well to wood will work as well or better with early generation products. Early-generation decking and railing that has been faded (approximately 12 – 16 weeks for new product) can be painted or stained at any time, even years after it has been installed. Use a paint or stain that is designed for a walking surface. Contact the manufacturing to make sure these meet ADA requirements for walking surfaces before applying.

What types of paints and stains can I use?

Most paints or stains that you would apply to wood can be applied to early-generation products (this does not include Trex Escapes® decking). The following companies have evaluated early-generation products and suggested these coatings:

MANUFACTURER SUGGESTED STAINS

Paint Manufacturer	Tech Support Phone Number	Suggested Coating
Behr	800-854-0133	Behr Premium® Solid Color
Sherwin Williams	800-474-3794	S-W Deckscapes ext. acrylic Deck Stain A15-150 Series S-W Woodscapes ext. acrylic Deck Stain A15 Series

What about cleaning my painted or stained early-generation products?

Consult your paint or stain manufacturer's directions before cleaning.

PHYSICAL AND MECHANICAL PROPERTIES FOR TREX TRANSCEND® AND TREX ENHANCE®

	TEST METHOD	VALUES	
Flame Spread (a)	ASTM E84	60	
	Typical Trex® Values for Coefficient of Thermal Expansion/Contraction (36" (91.4 cm) long samples)		
Thermal	Width	35.2 x 10-6 to 42.7 x 10-6 (inch/inch/°F) 644 x 10-6 to 776 x 10-6 (length/length/°C)	
	Length	16.1 x 10-6 to 19.2 x 10-6 (inch/inch/°F) 297 x 10-6 to 356 x 10-6 (length/length/°C)	
Moisture	Typical Trex Values for Long-Term Water Immersion (36"/91.4 cm long samples) Width ~3%	Typical Trex Values for Constant High Humidity (6"/15.2 cm long samples) ~1%	
Nail Withdrawal	ASTM D1761	163 lbs/in (1.12 Mpa)	
Screw Withdrawal	ASTM D1761	558 lbs/in (3.85 Mpa)	
Fungus Resistance (White & Brown Rot)	ASTM D1413	Rating = No Decay	
Termite Resistance (c)	AWPAE1-72	Rating = 9.6	
		ULTIMATE (TYPICAL) VALUES	DESIGN VALUES
Compression Parallel (d)(e)	ASTM D198	836 psi (5.76 Mpa)	540 psi (3.72 Mpa)
Compression Perpendicular (d)(f)	ASTM D143	861 psi (5.94 Mpa)	540 psi (3.72 Mpa)
Tensile Strength (d)	ASTM D198	1562 psi (10.77 Mpa)	500 psi (3.45 Mpa)
Shear Strength (d)	ASTM D143	559 psi (3.85 Mpa)	360 psi (2.48 Mpa)
Modulus of Elasticity (d)	ASTM D4761	412,000 psi (2840.64 Mpa)	200,000 psi (1378.95 Mpa)
Thermal Conductivity	ASTM C177	1.57 BTU-in/hr-ft @85°F (.0023 W/cm/°C)	

NOTES:
(a) Corresponding Smoke Developed Index is 300.
(b) Values shown are for reference only. These values should not be used to calculate gapping for Trex. Follow Trex installation literature for proper width-to-width and end-to-end gapping information.
(c) Material weight loss was 0%.
(d) Ultimate strength values are not meant for design analysis. Testing performed on a 1" x 5.5" (2.5 cm x 14 cm) cross section. Design values are for temperatures up to 130°F (54°C).
(e) Compressive strength parallel to the length.
(f) Compressive strength perpendicular to length.

PHYSICAL AND MECHANICAL PROPERTIES FOR TREX SELECT® DECKING

	TEST METHOD	VALUES	
Flame Spread	ASTM E84	85	
	Typical Trex® Values for Coefficient of Thermal Expansion/Contraction (36" (91.4 cm) long samples)		
Thermal	Width	42.7 x 10-6 (inch/inch/°F) 776 x 10-6 (length/length/°C)	
	Length	19.2 x 10-6 (inch/inch/°F) 356 x 10-6 (length/length/°C)	
Water Absorption	ASTM D1037	1.20%	
Screw Withdrawal	ASTM D1761	388 lbs/in (2.45 Mpa)	
Termite Resistance (a)	AWPAE1-72	Rating = 9.7	
		ULTIMATE (TYPICAL) VALUES	DESIGN VALUES
Modulus of Rupture	ASTM D4761	3750 psi (25.86 Mpa)	500 psi (3.45 Mpa)
Modulus of Elasticity (b)	ASTM D4761	400,000 psi (2757.90 Mpa)	200,000 psi (1378.95 Mpa)

NOTES:
(a) Eastern Subterranean
(b) Ultimate strength values are not meant for design analysis. Design values are for temperatures up to 130°F (54°C).

PHYSICAL AND MECHANICAL PROPERTIES FOR TREX EARLY-GENERATION COMPOSITES

	TEST METHOD	VALUES	
Abrasion Resistance	ASTM D2394	.01 wear/1000 revs.	
Hardness	ASTM D143	562 kg (5 kn)	
Self-Ignition Temperature	ASTM D1929	743°F (395°C)	
Flash-Ignition Temperature	ASTM D1929	698°F (370°C)	
Flame Spread (a) [Fire Defense]™	ASTM E84	80 [40]	
Water Absorption (sanded surface) 24 hr. immersion	ASTM D1037	4.3%	
Water Absorption (unsanded surface) 24 hr. immersion	ASTM D1037	1.7%	
	Typical Trex® Values for Coefficient of Thermal Expansion/Contraction (36" (91.4 cm) long samples)		
Thermal	Width	35.2 x 10-6 to 42.7 x 10-6 (inch/inch/°F) 644 x 10-6 to 776 x 10-6 (length/length/°C)	
	Length	16.1 x 10-6 to 19.2 x 10-6 (inch/inch/°F) 297 x 10-6 to 356 x 10-6 (length/length/°C)	
Moisture	Typical Trex Values for Long-Term Water Immersion (36"/91.4 cm long samples) Width ~3%	Typical Trex Values for Constant High Humidity (6"/15.2 cm long samples) ~1%	
Nail Withdrawal	ASTM D1761	163 lbs/in (1.12 Mpa)	
Screw Withdrawal	ASTM D1761	558 lbs/in (3.85 Mpa)	
Static Coefficient of Friction - Dry (c)/Wet (c)	ASTM F1679	0.62/0.70	
Fungus Resistance (White & Brown Rot)	ASTM D1413	Rating = No Decay	
Termite Resistance (d)	AWPAE1-72	Rating = 9.6	
Specific Gravity (typical)	ASTM D2395	>0.96	
		ULTIMATE (TYPICAL) VALUES	DESIGN VALUES
Compression Parallel (e)(f)	ASTM D198	1806 psi (12.45 Mpa)	550 psi (3.79 Mpa)
Compression Perpendicular (e)(g)	ASTM D143	1944 psi (13.40 Mpa)	625 psi (4.31 Mpa)
Tensile Strength (e)	ASTM D198	854 psi (5.89 Mpa)	250 psi (1.72 Mpa)
Shear Strength (e)	ASTM D143	561 psi (3.87 Mpa)	200 psi (1.38 Mpa)
Modulus of Rupture (e)	ASTM D4761	1423 psi (9.81 Mpa)	250 psi (1.72 Mpa)
Modulus of Elasticity (e)	ASTM D4761	175,000 psi (1206 Mpa)	100,000 psi (689.48 Mpa)
Thermal Conductivity	ASTM C177	1.57 BTU-in/hr-ft @85°F (.0023 W/cm/°C)	
Leachate (h)	TCLP-EPA 1311	Pass	

NOTES:
(a) Corresponding Smoke Developed Index is 285.
(b) Values shown are for reference only. These values should not be used to calculate gapping for Trex. Follow Trex installation literature for proper width-to-width and end-to-end gapping information.
(c) ASTM F1679 test conducted on sanded/unsanded weathered samples with neolite surface.
(d) Material weight loss was 0%.
(e) Ultimate strength values are not meant for design analysis. Testing performed on a 1" x 5.5" (2.5 cm x 14 cm) cross section. Design values are for temperatures up to 130°F (54°C).
(f) Compressive strength parallel to the length.
(g) Compressive strength perpendicular to length.
(h) Leaching was below levels established by EPA for all constituent categories.

GLOSSARY OF TERMS

Standard Composite	Trex Early-Generation Composites
PVC	Trex Escapes®
High Performance Composite	Trex Transcend®, Trex Enhance®, Trex Select®

Baluster	One of a number of closely spaced supports for a railing.
Baluster Spacer	A piece that snaps into top and bottom rail that gives precise spacing to the balusters.
Bird's Mouth Gasket	A 45° corner cut gasket to be used when attaching railing to the corner of a 4" x 4" (10.2 cm x 10.2 cm) post sleeve.
Bump Stop Tab	Part of the connector clip and allows for 1/4" (0.6 cm) spacing between decking boards.
Carriage Bolt	A bolt with a rounded head and a square shoulder under the head to prevent turning during installation.
Connector Clip	Hidden fastener used between deck boards to secure positioning.
Fascia	Horizontal trim board used to cover rim and end joists. May also be used for stair risers.
Foot Block	Provides support for the bottom rail and gives a finished appearance.
Joist	A horizontal structural pressure-treated board that runs from wall-to-wall, wall-to-beam, or beam-to-beam to support the deck floor and decking materials.
Lag Bolt	A large metal fastener with a hex head and screw threads that drive it into the wood.
Ledger Board	A beam supporting one end of the joists.
Nosing	The rounded front edge of a stair tread.
Pan-head Screw	Self-tapping screw with W-cut design and slightly rounded head.
Pergola	A horizontal trellis or framework, supported on round or square posts, that can carry climbing plants and provides limited cover from sunshine. It may form a covered walk.
Post Sleeve	Formed sleeve that fits over a standard pressure-treated 4x4 post.
Post Sleeve Cap	Attractive flat or pyramid shaped cap to place on top of post sleeve.
Post Sleeve Skirt	Decorative skirt that surrounds the bottom of the post and rests on surface of deck.
Rail Gasket	A gasket used to fill the gap between the railing and post.
Rail Light	Light that attaches to side of post sleeve.
Rail Support Bracket (RSB)	Innovative bracket designed for horizontal, angled, and stair railing installations.
Recessed Light	Light that is recessed so it sets flush with decking surface.
Rim Joist	A joist on either side or the end of the deck. May have stairs attached and typically opposite of the ledger board.
Riser	The vertical board nailed to a stringer.
Riser Light	Light that attaches to stair riser.
Scarf Cut	A joint used to join two pieces of decking end-to-end, usually cut at a 45° angle.
Screw Plug	A small plug to cover a screw.
Self-tapping Screw	A fastener that taps and drills its own hole and does not require a pre-drilled hole.
Shim	A wedge that is placed between two surfaces to fill in the gap.

Bump Stop Tab

GLOSSARY OF TERMS/CONTINUED

Stair Tread	Steps or stairway boards that are the steps.
Start Clip	Metal clips used at the end of decking boards to secure them in position.
Stringer	The structural member in a stairway that supports the treads and risers.
Tempered Glass	A safety glass that is four to five times stronger than standard glass made by a process of extreme heating and cooling.
Toenailing	Attaching two pieces of decking together by driving a nail at an angle through one piece into the other.
Universal Fastener	Plastic 1/4" (0.6 cm) self-gapping hidden fastener that has increased durability and allows for easier and faster installation than traditional fasteners.
Wall Return Fitting	A fitting that can attach directly to wall or post.
Weather Stripping	A self-adhesive strip applied to the glass panel option to create a tight fit with top and bottom rails.

PLANNING AHEAD

PLANNING AHEAD

Trex® Decking:
» When installing Trex Transcend® tropical colors of Spiced Rum, Lava Rock, and Tiki Torch, it is a good idea to mix and match all of the boards on the job site prior to installation to ensure an appealing mix of light and dark tones.

Railing (Including ADA Handrail):
» First, pick the railing style you want.
» Calculate your spanning based on the railing you chose.
» Determine the number of balusters you will need based on the railing you choose. *See pages 59, 79, and 104.*

NOTE: Trex railings are made to be installed at maximum of 6' (1.82 m) or 8' (2.44 m) on center (depending upon type of railing you choose). Trex railings are not true 6' (72") or 8' (96") in length.

» Determine post locations prior to installing any decking. In most cases, posts are usually installed before decking is installed.
» Confirm with your local building official if ADA Handrail is required, and if so plan spanning for posts accordingly to allow for attachment of Trex ADA Handrail. ADA Handrail requires a span of 6' OC for posts.
» Grill placement: A good recommendation to help prevent damage to your railing is to not have a grill too close to your railing. Allow for ample airspace between the back/sides of your grill to help prevent charring or staining to the railing.

See pages 59-78 for Transcend railing installation, pages 104-113 for Select® railing installation, pages 79-103 for Reveal® railing installation, pages 114-125 for Traditional railing installation, and pages 125-128 for ADA Handrail installation.

Trex Lighting:
» Plan locations of lights, power supply, timer, and dimmer. These should be accessible for service if necessary.
» Install wiring before decking and railing have been installed.
» **DO NOT** run wires between joists and deck boards.

See pages 24-31 for Trex® DeckLighting™ and Trex Landscaping installation.

Trex® RainEscape® Deck Drainage System:
» Plan ahead for deck layout to allow for proper placement of Trex RainEscape within the joist system.
» Make sure joists are straight and square.

See www.trex.com for more information on Trex RainEscape recommendations and installation. Trex RainEscape is manufactured and distributed by Dri-Deck Enterprises, LLC, under a trademark license with Trex Company, Inc.

Installing Hot Tubs, Planters, and Seating:
» Plan ahead proper joist spanning if required (this is especially important if installing a hot tub).
» *Refer to page 39 for Trex Decking Span Chart for specific loads.*

Call 1-800-BUY-TREX for detailed questions.

Installing Fireplaces and/or Fire Pits With Trex Decking:

» Determine if fire will be gas or wood burning (***NOTE:*** *Most fire pits shown in Trex ads are gas burning*).
» For gas, the fire pit is installed by cutting around the Trex decking. **It is not to be installed on top of Trex decking.** A fire resistant material is installed under the fire pit and a protective "wall" made from stone or other fire resistant material is installed to hold fire pit in place and also protect the decking from heat.
» For wood, fire pits are not recommended on top of Trex decking unless using a product called DeckProtect®. Wood burning fire pits can damage the decking due to extreme heat from the bottom of the fire pit and/or burning embers "shooting" onto the decking. DeckProtect® was tested on all Trex decking and there were no issues with burning of the decking surface when placed directly under a standard size portable fire pit along with the accompanying rack (***NOTE:*** *Rack is not available for all sizes, so check with manufacturer first for verification*). Trex does recommend that the DeckProtect® padding/rack be moved from time to time for general cleaning underneath. It should be noted that even when using DeckProtect®, burning embers could "shoot" beyond the protective mat and burn the deck.

For more information about this product, please visit their website at *www.deckprotect.net* or call 1-800-BUY-TREX. DeckProtect® is a registered trademark of Infinite Heat Solutions.

PLANNING AHEAD/CONTINUED

Installing a Pergola on Trex Decking:

» Keep in mind if you are planning to install a Trex®Pergola™ on your deck, you will need access to the underside of the deck. Trex Pergola mounts with a 10" x 10" (25.4 cm x 25.4 cm) aluminum plate on the underside of the deck, creating a clamping effect on both the top and bottom of the deck for maximum strength. If installed, water barriers and any underdeck coverings will have to be removed to properly install the pergola posts.

» You need to consider the location of your pergola posts in respect to joists. However, you do not have to mount your plates between joists. It is possible to place blocks on the bottom of the joists and mount the Trex Pergola brackets through the blocks.

Installing a Trex Spiral Staircase:

» *Refer to www.trexspiralstairs.com for detailed information on how to plan and install Trex® Spiral Stairs™.*

NOTE: *You can always reference the Design Tools Section on www.trex.com for additional planning ahead aids.*

Trex Pergola products are manufactured and sold by Home & Leisure, Inc., d/b/a Backyard America under a trademark license with Trex Company, Inc.

Special Patterns

When planning a unique pattern, you will need to adjust the framing to support the surface pattern. *Refer to the span and gapping charts on pages 39-40.* Many decks are designed to take advantage of angles, as shown below.

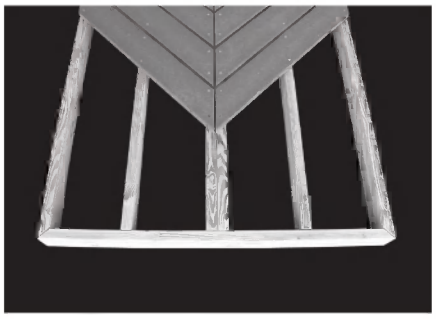

Herringbone Pattern

Tile Pattern

Picture Frame Pattern

LIGHTING

TREX® OUTDOORLIGHTING™ SPECIFICATIONS AND PROFILES

DECK LIGHTING	DESCRIPTION	ITEM NUMBER	COLORS
Pyramid Post Cap Light	» 4" x 4" (10.2 cm x 10.2 cm) LED Pyramid post cap light [4.55" x 4.55" (114 mm x 114 mm) internal dimensions] » 5'6" Male LightHub lead wire	XXPYLEDCAP4X4C	BK, WT, FP, TH, VL, GP, RS
Flat Post Cap Light 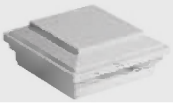	» 4" x 4" (10.2 cm x 10.2 cm) LED Flat post cap light [4.55" x 4.55" (114 mm x 114 mm) internal dimensions] » 5'6" Male LightHub lead wire	XXSQLEDCAP4X4C	BK, WT, FP, TH, VL, GP, RS
Deck Rail Light	» LED Deck rail light, 2.75" (70 mm) OD » 5'6" Male LightHub lead wire	XXLAMPLEDC	BK, WT, BZ (textured)
LED Riser 4-Pack	» 4 LED Riser lights, 1.25" (32 mm) OD » 5'6" Male LightHub lead wire	XXRISERLED4PKC	BK, WT, BZ (textured)
Recessed Deck Light 4-Pack	» 4 LED Recessed lights, 1" (25 mm) OD » 5'6" Male LightHub lead wire	RECESSLED4PKC	

LANDSCAPE LIGHTING	DESCRIPTION	ITEM NUMBER	COLORS
	» Rounded path light » Stepped path light » Well light » Multi-function light » Spotlight* *Includes: 36v Step-up transformer and female-to-female adapter	BKRDPATH2PK, BZRDPATH2PK BKSPATH2PK, BZSPATH2PK BKWELL, BZWELL BKMULTI, BZMULTI BKSPOT, BZSPOT	BK

XX = INSERT COLOR PREFIX: **BK** Black **BZ** Bronze **FP** Fire Pit **GP** Gravel Path **RS** Rope Swing **SR** Spiced Rum **TH** Tree House **VL** Vintage Lantern **WT** Classic White

TREX® OUTDOORLIGHTING™ ACCESSORIES SPECIFICATIONS AND PROFILES

ACCESSORIES	DESCRIPTION	ITEM NUMBER	COLORS
Transformer with Timer 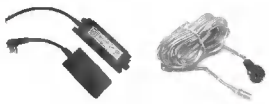	» Output voltage: 12VDC » Output power: 60W or 30W » Output current: 5A or 2.5A » Photo-activated timer » 20 ft. LightHub™ wire extension cable	5A, 60W: DLTRANSFORMER 2.5A, 30W: 2.5DLTRANSFORMER	
5-Way Transformer Splitter	» Splits transformer/dimmer connection 5-ways » Required for multiple Spotlight installation » Creates multiple dimmer zones without splicing	DL5TFSPLIT1PK	
Dimmer	» Single channel with remote	DLDIMMER	
1" (25 mm) Forstner Bit 6-Pack		DLBIT6PK	
LightHub Accessories	» 6-way Splitter » 5 ft. Wire extension cable » 10 ft. Wire extension cable » 20 ft. Wire extension cable » 40 ft. Wire extension cable » 60 ft. Wire extension cable » Female-to-female adapter	DL6SPLIT4PK DL5FTWR4PK DL10FTWR4PK DL20FTWR4PK DL40FTWR2PK DL60FTWR1PK DLFADAP6PK	

HOW TO INSTALL TREX® DECKLIGHTING™

PARTS

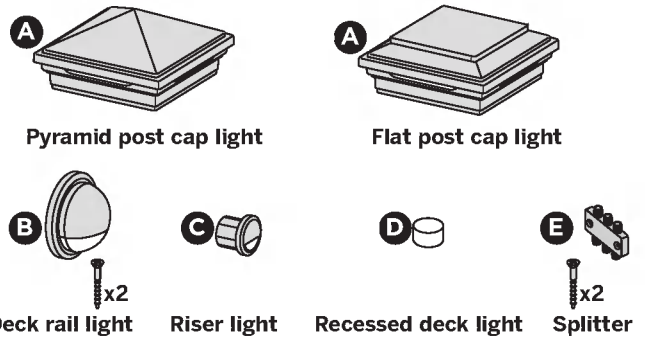

» 5ft, 10ft, 20ft, 40ft, and 60ft connection/extension wires sold separately (these are male-to-male connection wires).

TOOLS NEEDED

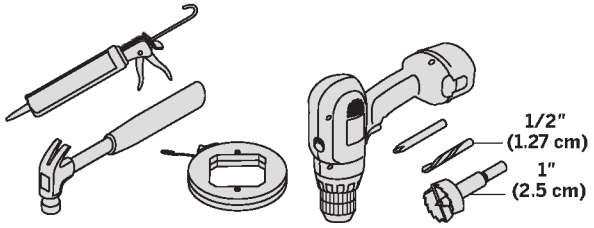

Lighting and Wiring Overview

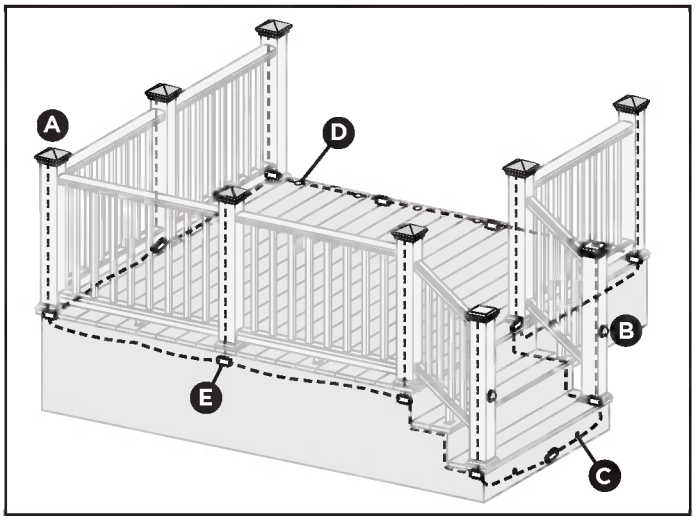

NOTE: *All wiring and splitters are mounted to inside of framing, picture is just representation of where to place these in general.*

NOTE: *Avoid railing brackets and locations for deck rail lights when running wires up posts.*

NOTE: *It is recommended to install wiring and splitters before decking and railing have been installed.* ***DO NOT*** *run wires between joists and deck boards.*

HELPFUL TIPS

» Leave slack in wire to make fixture terminations.
» Recessed lights work well spaced 4′ (1.22 m) to 6′ (1.83 m) on center around perimeter of deck.
» Deck rail lights work well at changes in levels of a deck—at the top or the bottom of the stairs, or in conjunction with post cap lights.
» Riser lights should be placed giving considerations to local codes. If codes do not exist, assess adequate number and placement via darkness evaluation prior to drilling.
» Drill holes perpendicular to the surface, being careful to hold drill steady, to avoid producing an enlarged hole. If hole is enlarged, light fixture will have a loose fit. Use of a flexible outdoor semi-permanent adhesive (silicone caulk) may be required to anchor light in place.
» Riser and deck rail holes can be through holes. However, recessed light holes should be drilled to a depth of 3/4″ (1.9 cm). Over-drilled recessed light holes will require use of silicone caulk to anchor light in place.
» Splitters should be used at each post that has lights and depending on spacing in between each riser and recessed light.
» Cap all unused female connections with caps provided or weather resistant silicone to prevent water damage or corrosion.
» The splitter is cross linked so there is no specified plug for lights versus lead wires.
» Leads attached to each light are approx. 5' to 6' (1.5 m to 1.8 m) in length and have male terminals to plug into splitter.
» Use a separate dimmer control for each light type for maximum control.
» It is recommended to have power source attached when installing lights to ensure all components work.

HOW TO INSTALL TREX® DECKLIGHTING™/CONTINUED

General Information

» **ALWAYS** consult local codes before beginning a project.

» **USE TREX TRANSFORMER ONLY. Use of any other transformer voids warranty.**

TRANSFORMER CAPACITY BY TYPE		
Type of Light	5A Transformer (DL TRANSFORMER)	2.5A Transformer (2.5 DL TRANSFORMER)
Riser	180	90
Recessed	180	90
Post Cap	55	22
Deck Rail	180	90

Above listing is for maximum number of each individual types of lights. If mixing and matching lighting, contact Trex to determine if more than one transformer is required.

Planning

NOTE: *When designing your deck, plan locations of lights, power supply, timer, and dimmer. These should be accessible for service. Installing a GFCI outlet is REQUIRED to help prevent damage to lighting from electrical surges.*

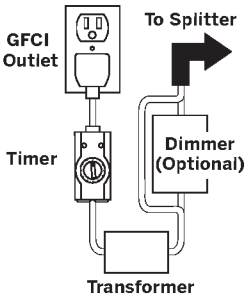

1. The dimmer remote will work in a 30' (9 m) radius of the unit.
2. Dimmer should be installed in a dry location.
3. Timer must be installed vertically with receptacle facing downwards. Timer must be at least 1' (.305 m) from ground level when installed as per federal safety code height regulations. Timer must be in view of the sun to use the dusk/dawn feature.

Installing Wiring

NOTE: *It is recommended to install wiring and splitters before decking and railing have been installed.*

» Use male-to-male connection wire (lengths vary) that will connect to each required splitter.

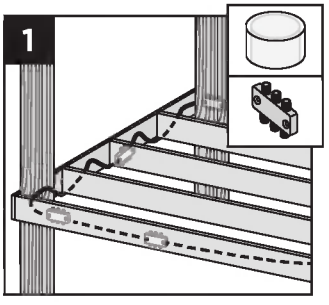

1. Wiring must be run under decking structure and behind stringers. **DO NOT** run wires between deck boards and joists. Staple to frame with cable staples at least 1/4" (0.6 cm) wide. **DO NOT** crush wire insulation with staple.

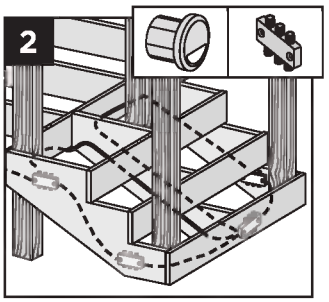

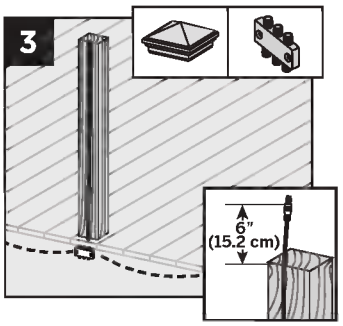

2. Wiring can be run under deck and behind risers. Staple to frame with cable staples at least 1/4" (0.6 cm) wide. **DO NOT** crush wire insulation with staple.
3. Remove 5' (1.52 m) lead wire that is connected to post cap and attach wire to post with male connection at top of post (female connection would be at bottom of post and connect into splitter). Avoid running wire on side of post where railing brackets or deck rail lights will be installed. Leave approximately 6" (15.2 cm) of lead at top to make connections. Staple to frame and posts with cable staples at least 1/4" (0.6 cm) wide. **DO NOT** crush wire insulation with staple.

Making Connections

1. Install splitters to inside of framing using hardware provided. Install at every post base where lighting is present and depending on spacing in between each riser and recessed light.

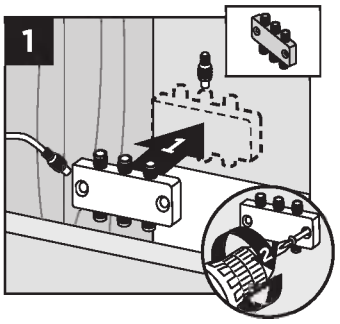

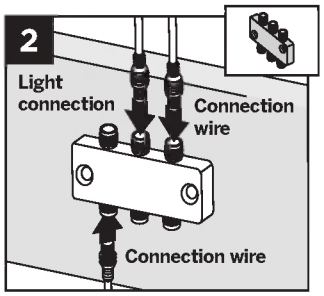

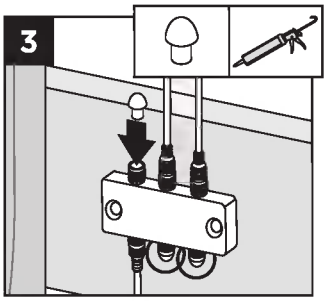

2. Attach male lead from lights to female connections on splitter. Also attach male-to-male connection wires in between each splitter. Continue until all wiring from lights are attached to splitters and connector wires are attached in between splitters.
3. Cap off all unused female connections on splitters using caps provided or weather-resistant silicone.

HOW TO INSTALL TREX® DECKLIGHTING™/CONTINUED

Timer Operation Instructions

Select the mode of operation:
» Dusk to Dawn
» 1 - 8 hours
» Always "ON"
» "OFF"

Program repeats daily. When power is flowing to lights, green light above POWER is on.

Installing Post Cap Lights

NOTE: *Install post cap lights after the railing system, post sleeve skirt, and post sleeve have been installed.*

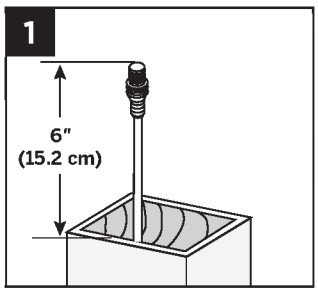

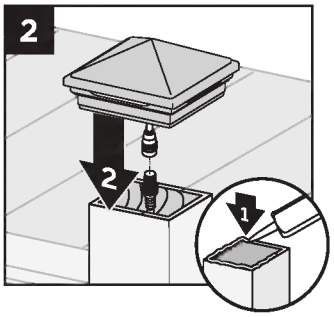

1. Connect male lead from wiring to female connector from cap. Also attach male-to-male connection wires in between each splitter. Continue until all wiring from lights are attached to splitters as well as connector wires are attached in between splitters. *(See Making Connections section for details.)*
2. After verifying wiring is correct by turning lights on, attach cap to top of post with silicone caulk.

Installing Deck Rail Lights

NOTE: *Instructions shown below are for new deck installation and are shown* ***BEFORE*** *railing system has been installed.*

1. Place post sleeve over pressure-treated post and mark desired height, centered on post sleeve for deck rail light location.

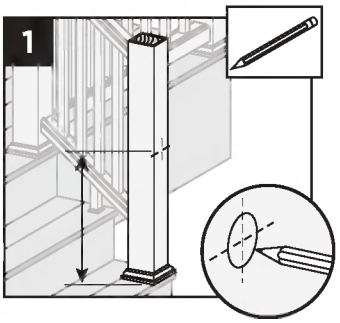

NOTE: *If deck boards are not installed yet, place an appropriate deck width spacer board to ensure post sleeve is at correct height.*

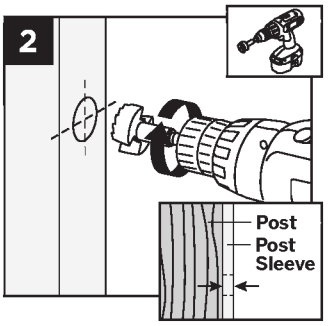

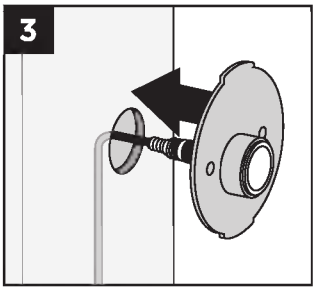

2. Drill a 1" (2.5 cm) hole through post sleeve. Use care to stop drill before cutting into post.
3. Remove the post sleeve from the post and fish wire from deck rail light through hole and down to female connector on splitter. Also attach male-to-male connection wires in between each splitter. Continue until all wiring from lights are attached to splitters as well as connector wires are attached in between splitters. *(See Making Connections section for details.)*

IMPORTANT NOTE: *Before attaching deck rail light to the post/post sleeve, make sure decking has been installed along with skirt over the post sleeve.*

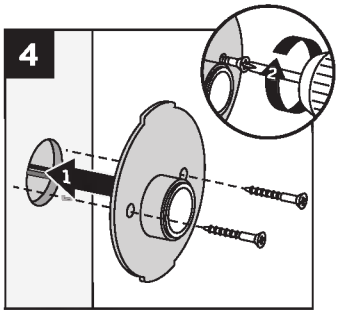

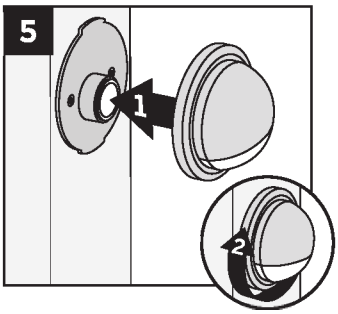

4. Replace post sleeve over pressure-treated post and align holes for screws vertically and attach fixture base to post with provided screws as indicated above.
5. Line up polycarbonate lens with fixture housing. Twist onto fixture base.

NOTE: *If railing has already been installed, lead wires will need to be fished through the post sleeve to reach the desired location for the deck rail light. In some cases if the provided lead wire does not fit (due to connector size), the wire connectors can be cut off wire nuts can be used. Test lights with the power on and if lights do not function that are wired with this method, switch the connector wires.*

Installing Riser Lights

NOTE: *Install riser lights after stair and risers have been installed.*

1. Mark locations for each light, generally 4" (10.2 cm) above tread. Consult local codes for lighting requirements.

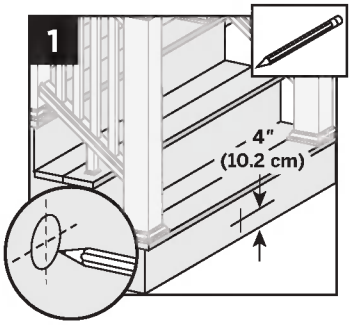

NOTE: *If possible, avoid locations over stringers as holes will be more difficult to create.*

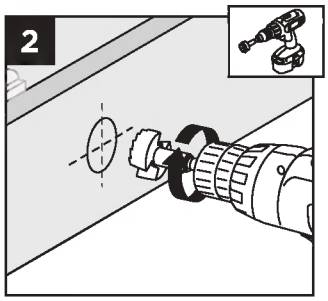

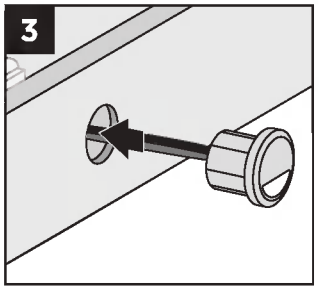

2. Drill a 1" (2.5 cm) diameter hole at least 1" (2.5 cm) deep into riser. If riser material is thicker than 1" (2.5 cm), use a 1/2" (1.27 cm) drill bit to create a passage for wires.
3. Thread wires through hole.
4. Press light into hole, ensuring lens is horizontal. Make connections behind stairs from male lead wire from recessed light into female connection on splitter. Also attach male-to-male connection wires in between each splitter. Continue until all wiring from lights are attached to splitters and connector wires are attached in between splitters. *(See Making Connections section for details.)*

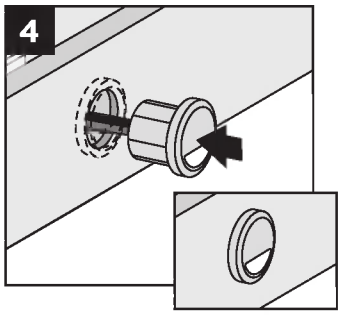

NOTE: DO NOT *install riser light or deck rail light into top or bottom rails or balusters.*

Installing Recessed Deck Lights

NOTE: *Install recessed deck lights after installing decking.*

1. Mark locations for lights in deck boards.

NOTE: *If possible, avoid locations over joists as holes will be more difficult to create.*

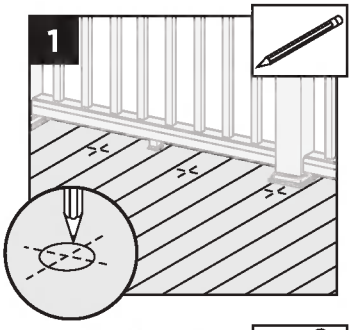

2. Drill a 1" (2.5 cm) diameter hole 3/4" (1.9 cm) deep into deck board. Hole cannot go all the way through deckboard or light will fall through. Make sure drill bit is perpendicular to board. Drill a 1/2" (1.27 cm) diameter hole in base of the first hole through deck board.

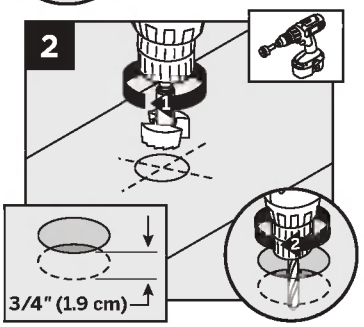

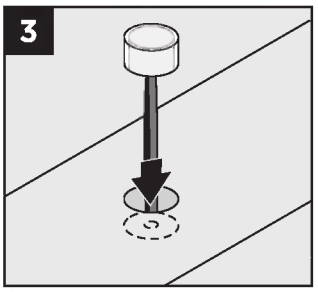

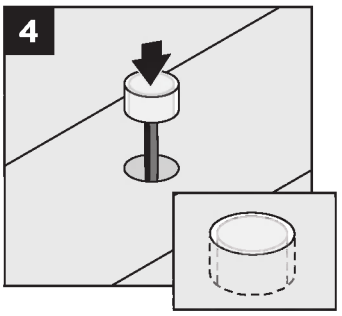

3. Thread wires through hole. **DO NOT pull LED into hole by pulling on wires. This may damage wires or LED.**
4. Press light into hole until flush with surface. Make connections under deck from male lead wire from riser light into female connection on splitter. Also attach male-to-male connection wires in between each splitter. Continue until all wiring from lights are attached to splitters and connector wires are attached in between splitters. *(See Making Connections section for details.)*

HOW TO INSTALL TREX® LANDSCAPELIGHTING™

PARTS

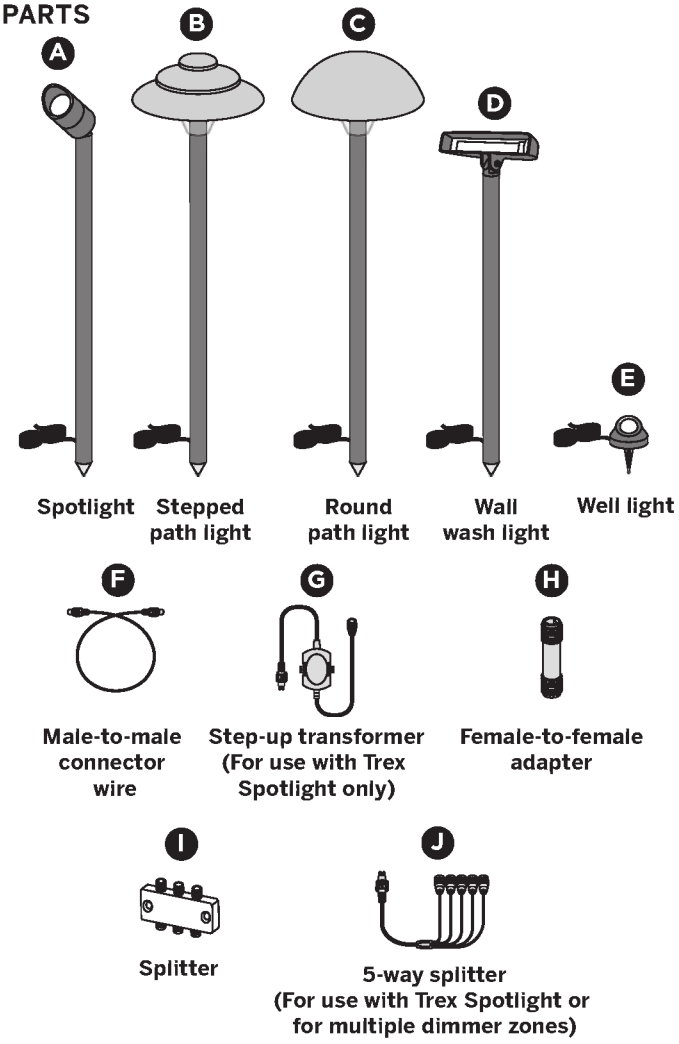

TOOLS NEEDED

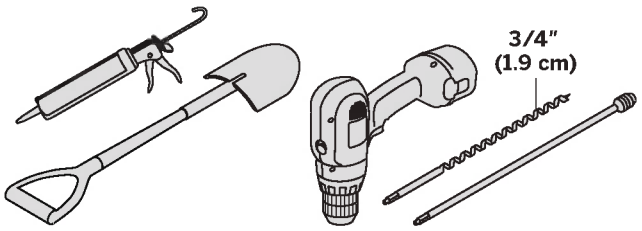

WARNING: BEFORE ANY TREX LANDSCAPE LIGHTING IS INSTALLED, IT IS THE INSTALLERS RESPONSIBILITY TO ENSURE THAT ALL UNDERGROUND UTILITIES/LINES ARE LOCATED (GAS LINES, ELECTRICAL LINES, DATA LINES, WATER LINES, ETC.) PRIOR TO ANY WORK BEING DONE.

HELPFUL TIPS

- Location of Trex LandscapeLighting is up to customer as to where they would like lighting components placed. Different length of lead wires can be purchased depending on the distances between lights.
- Leave slack in wire to make fixture terminations. Keep in mind slack will also be required to properly bury wire.
- Trex Landscape wires are approved for underground use. Wire is made from silver-coated copper.
- All landscape lights EXCEPT for Trex Spotlight have female connectors.
- Trex Spotlight will require the use of a female-to-female adaptor to connect light to male connector wire (this adaptor is sold with Trex Spotlight but is also sold separately if needed for other areas).
- All Trex landscape lights use male-to-male connector wires, sold in lengths of 5′, 10′, 20′, 40′, and 60′ *(sold separately).*
- All lights EXCEPT the spotlight can be wired together on a circuit. Optional 6-way splitters are available *(sold separately)* to make installation easier.
- Trex Spotlights require different wiring configurations; *refer to detailed instructions on following pages for specifics.*
- Only use a standard household AC GFCI protected outlet to help prevent damage from power surges or lightning.
- When using timer, ensure this is in full view of the sun if using the dusk/dawn feature.
- It is recommended to have power source attached when installing lights to ensure all components work.
- When burying wire in live sod, use spade shovel to make a slit in the soil. Bury the wire 1″-3″ (2.5 cm - 7.6 cm) deep and tamp down the soil. Water heavily to allow the soil to resettle and minimize impact on the installation site.

HOW TO INSTALL TREX® LANDSCAPELIGHTING™/CONTINUED
TREX WELL LIGHT, PATH LIGHTS, AND WALL WASH LIGHT

TRANSFORMER CAPACITY BY TYPE		
Type of Light	**5A Transformer (DL TRANSFORMER)**	**2.5A Transformer (2.5 DL TRANSFORMER)**
Well Light	46	23
Path Light	31	16
Wall Wash Light	31	16

Above listing is for maximum number of each individual types of lights. If mixing and matching lighting, contact Trex to determine if more than one transformer is required.

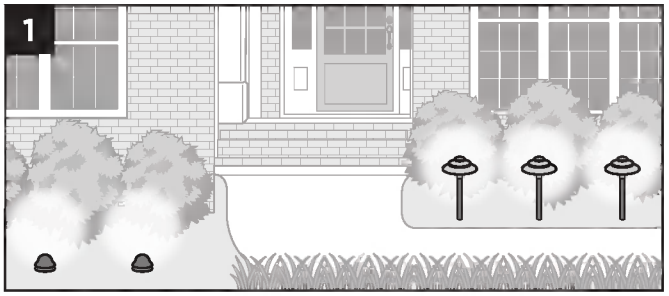

1. Locate placement of lights and lead wiring. Plan accordingly if you choose to bury wire under concrete or other permanent structures.
2. Place all lights in desired location. If necessary use 3/4" (1.9 cm) auger with optional extension in a drill to penetrate the surface enough to ensure the fixture is firmly implanted. **(SEE WARNING ON PREVIOUS PAGE)**

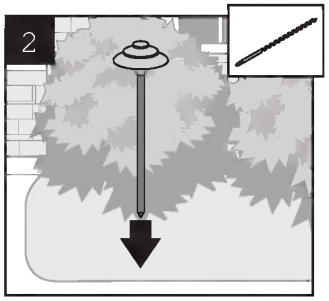

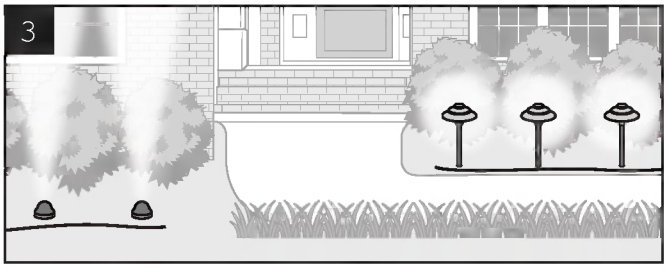

3. Run all wires from the power source locations to the lights on top of the soil, being mindful to leave slack. Pay special attention if using separate circuits with independent dimmers (grouping lights by type is recommended).

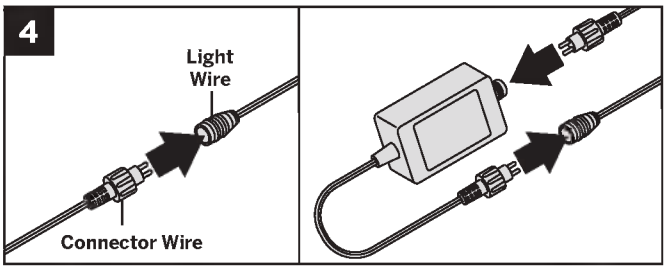

4. Connect all lights. Wire the optional dimmer (recommended) between the main 20' (6.1 m) transformer to male lead and the transformer for each circuit. Ensure connections (including splitters), fixtures, and power sources all work properly.

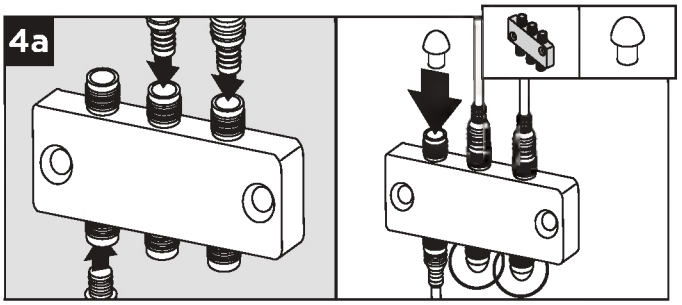

4a. Use male-to-male extension cables to make connections to splitters *(all sold separately)*. Cap off all unused female connections on splitters using caps provided or weather resistant silicone.
5. You can mix and combine all lights except the spotlight on the same circuit but make sure you **DO NOT** exceed the maximum number of lights per transformer. If running separate circuits with dimmers on each circuit, using a separate transformer for each circuit can simplify installation. However, use of a 5-way splitter will allow for separate circuits on the same transformer.
6. It is recommended the installer preview light placement in the dark to ensure desired effect is achieved.
7. Once the light, wire, and splitter placement is finalized, work from the light fixtures towards the power source to bury the wire to the desired depth. No more than 1"-3" (2.5 cm - 7.6 cm) is required.

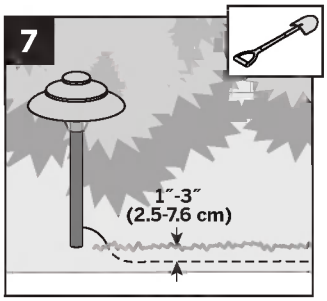

HOW TO INSTALL TREX® LANDSCAPELIGHTING™/CONTINUED
TREX SPOTLIGHT

TRANSFORMER CAPACITY BY TYPE	
Type of Light	**5A Transformer (DL TRANSFORMER)**
Spotlight	7

Above listing is for maximum number of each individual types of lights. If mixing and matching lighting, contact Trex to determine if more than one transformer is required.

NOTES:

» Each Trex Spotlight requires use of a dedicated 36V Step-up Transformer (included with each Trex Spotlight). **WARNING:** Step-up Transformer **DOES NOT** have fault protection, thus care must be taken if testing.

» Spotlights must use a dedicated line running directly from the included 36V step-up transformer. **Maximum** of seven spotlights are allowed per one 5-amp transformer. *(**NOTE:** Must use two 5-way splitters if installing six or seven spotlights to single 5A transformer as 5-way splitter is designed for up to five spotlights.)* Spotlights have a male lead and require the use of a female-to-female adaptor to connect spotlight to connector wire. The spotlight fixture has a male lead. Install the extension cable accordingly. **DO NOT mix** any other lights on the spotlight circuit. Applying 36V to any other fixture types will result in very short diode life and will void warranty.

» **DO NOT LOOK DIRECTLY INTO SPOTLIGHT WHEN ON—THIS LIGHT IS VERY STRONG.**

1. Locate placement of spotlights and lead wiring. Plan accordingly if you choose to bury wire under concrete or other permanent structures.

2. Connect male lead from light to female to one end of female adaptor.

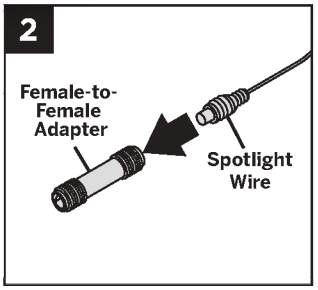

3. Connect opposite end of female adaptor to male connector wire. Choose appropriate length wire based on your needs. Run all wire on the surface back to the location of the power supply.

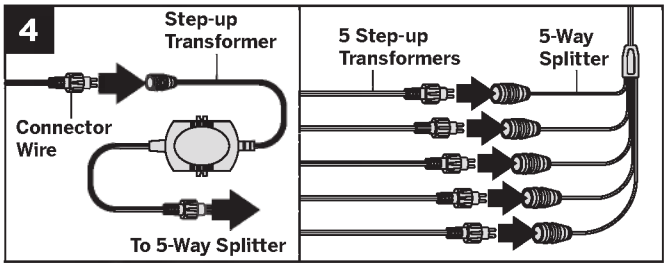

4. Connect opposite end of male connector wire cable to female end on Step-up Transformer. If using more than one spotlight, use 5-way splitter on Step-up Transformer, making sure that each spotlight is utilizing its own 36V Step-up Transformer. Wire the Step-up Transformer or 5-way splitter to the 5A main transformer.

HOW TO INSTALL TREX® LANDSCAPELIGHTING™/CONTINUED
TREX SPOTLIGHT

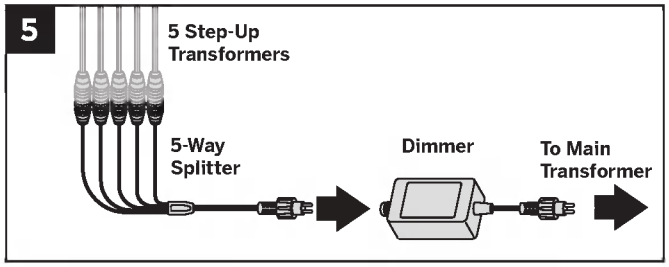

5. If using an optional dimmer (recommended), simply place the dimmer between the 5-way splitter and main transformer.
6. Test lights to ensure power supply, connections, and light fixtures all work properly and placement is appropriate.
7. Ensure that all unused connections on 5-way splitter are covered using weather resistant silicone.

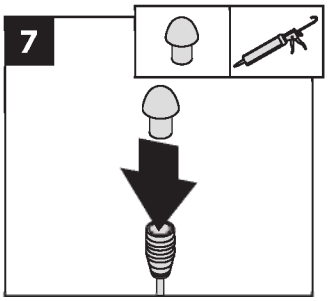

8. Ensure that lights are all working with all wiring attached prior to burying any wire. No more than 1″-3″ (2.5 cm - 7.6 cm) is required.

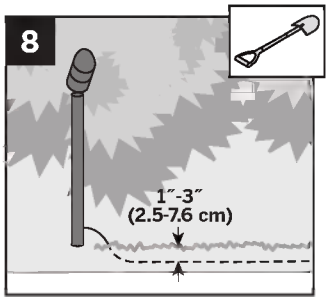

DECKING

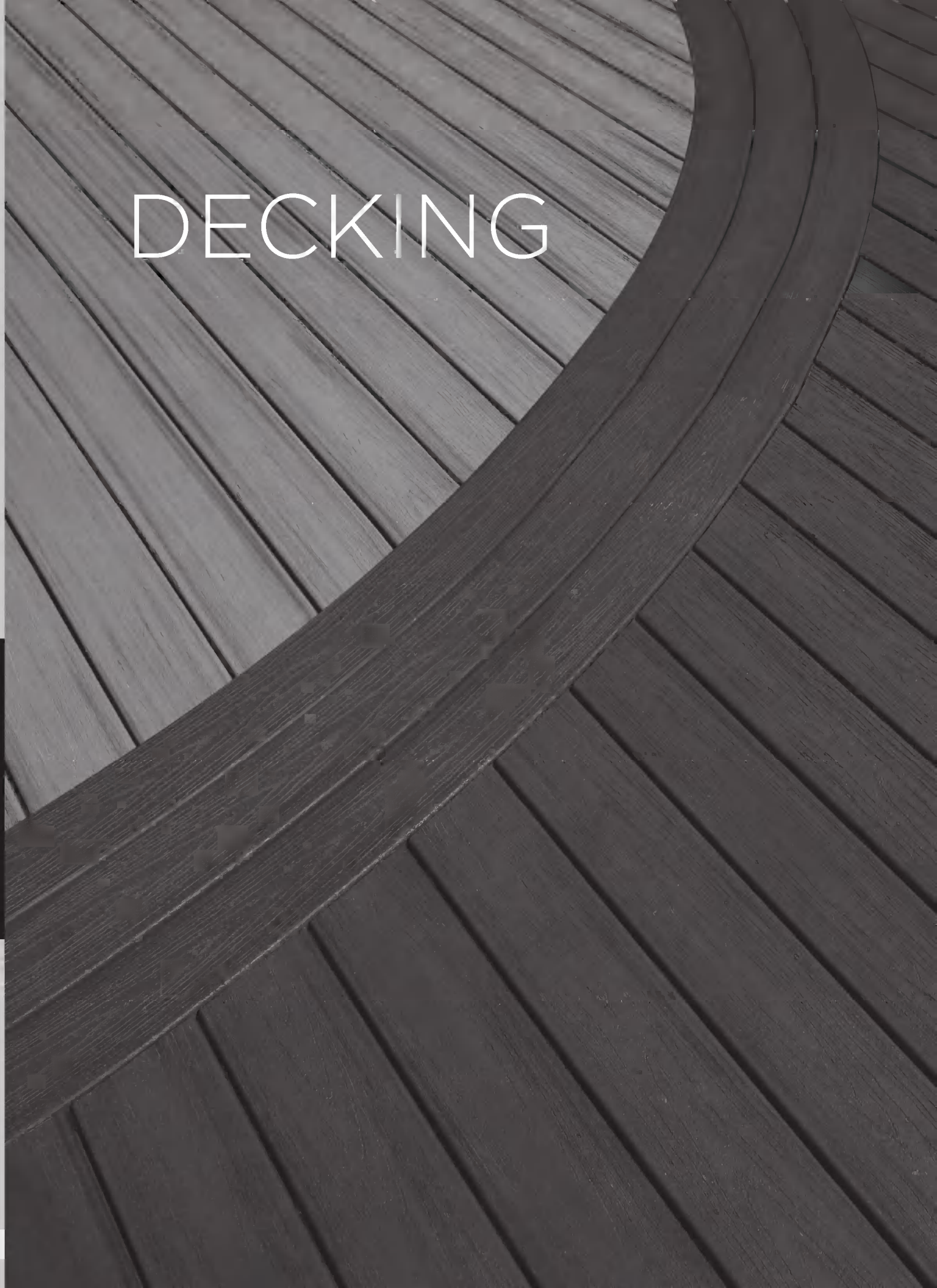

DECKING SPECIFICATIONS AND PROFILES

DECKING	DESCRIPTION		ITEM NUMBER	COLORS
1" (2.5 cm) Square Edge Board Actual dimensions: 1" x 5.5" (2.5 cm x 14 cm) Select decking actual dimensions: .875 x 5.5" (2.2 cm x 14 cm) 	1 x 6 x 12' 1 x 6 x 16' 1 x 6 x 20'	Transcend® Transcend Transcend	XX010612TS48 XX010616TS48 XX010620TS48	LR, SR, TT, FP, GP, RS, TH, VL
	1 x 6 x 12' 1 x 6 x 16' 1 x 6 x 20'	Enhance® Enhance Enhance	XX010612ES48 XX010616ES48 XX010620ES48	BD, CS, SD
	7/8 x 6 x 12' 7/8 x 6 x 16' 7/8 x 6 x 20'	Select® Select Select	XX010612SS64 XX010616SS64 XX010620SS64	MB, PG, SD, WG, WB
1" Grooved-Edge Board Actual dimensions: 1" x 5.5" (2.5 x 14 cm) Select decking actual dimensions: .875 x 5.5" (2.2 cm x 14 cm) 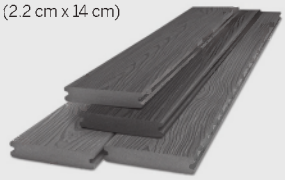	1 x 6 x 12' 1 x 6 x 16' 1 x 6 x 20'	Transcend Transcend Transcend	XX010612TG48 XX010616TG48 XX010620TG48	LR, SR, TT, FP, GP, RS, TH, VL
	1 x 6 x 12' 1 x 6 x 16' 1 x 6 x 20'	Enhance Enhance Enhance	XX010612EG48 XX010616EG48 XX010620EG48	BD, CS, SD
	7/8 x 6 x 12' 7/8 x 6 x 16' 7/8 x 6 x 20'	Select Select Select	XX010612SG64 XX010616SG64 XX010620SG64	MB, PG, SD, WG, WB
1" Grooved Porch Floor Board Actual face dimensions: 1" x 4.25" (2.5 cm x 10.8 cm) Actual overall dimensions: 1" x 4.5" (2.5 cm x 11.4 cm) **Can also be used for decking applications.**	1 x 4.5 x 10' 1 x 4.5 x 12' 1 x 4.5 x 16'	Transcend Porch Transcend Porch Transcend Porch	XX010510TP60 XX010512TP60 XX010516TP60	FP, GP, SR
2" Square Edge Board Actual dimensions: Transcend 2x4: 1.375" x 3.5" (35 mm x 89 mm) Transcend 2x6: 1.375" x 5.5" (35 mm x 140 mm) Select 2x6: 1.375"x 5.5" (35 mm x 140 mm) 	2 x 4 x 16' 2 x 6 x 16' 2 x 6 x 20'	Transcend Transcend Transcend	XX020416TS48 XX020616TS32 XX020620TS32	FP, GP, TH, VL
	2 x 6 x 12' 2 x 6 x 16' 2 x 6 x 20'	Select Select Select	XX020612SS32 XX020616SS32 XX020620SS32	MB, PG, SD, WB
1" x 8" Fascia Actual dimensions: .75" x 7.25" x 12' (1.9 cm x 18.4 cm x 3.66 m) 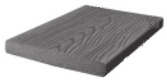	12' (3.66 m)	Transcend	XX010812TS60	LR, SR, TT, FP, GP, RS, TH, VL
	12' (3.66 m)	Enhance	XX010812ES60	BD, CS, SD
	12' (3.66 m)	Select	XX010812SS60	MB, PG, SD, WG, WB
	12' (3.66 m)	Universal	WW010812ES60	WHITE
1" x 12" Fascia Actual Dimensions: .75" x 11.25" x 12' (1.9 cm x 28.9 cm x 3.66 m) 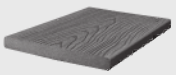	12' (3.66 m)	Transcend	XX011212TS40	LR, SR, TT, FP, GP, RS, TH, VL
	12' (3.66 m)	Enhance	XX011212ES40	BD, CS, SD
	12' (3.66 m)	Select	XX011212SS40	MB, PG, SD, WG, WB
	12' (3.66 m)	Universal	WW011212ES40	WHITE

XX = INSERT COLOR PREFIX: **BD** Beach Dune **CS** Clam Shell **FP** Fire Pit **GP** Gravel Path **LR** Lava Rock **MB** Madeira **PG** Pebble Grey **RS** Rope Swing **SD** Saddle **SR** Spiced Rum **TH** Tree House **TT** Tiki Torch **VL** Vintage Lantern **WB** Woodland Brown **WG** Winchester Grey

DECKING SPECIFICATIONS AND PROFILES

TREX HIDEAWAY® HIDDEN FASTENING SYSTEM	DESCRIPTION	ITEM NUMBER
Connector Clip (stainless steel)	50 sq. ft. box	CONNECTCLIP
	500 sq. ft. bucket	CLIPPAIL
Gun Pail	500 sq. ft. (46.5 m^2) bucket with collated pneumatic screws	GUNCLIP
Start Clip (stainless steel)	400 sq. ft. bag	STARTERCLIP
Universal Starter Clip	400 sq. ft. bag	UNIVSTARTERCLIP
Universal Fastener (glass-filled nylon)	50 sq. ft. box	UNIVCONCLIP
	500 sq. ft. bucket	DA00002
Router Bit	Router Bit	ROUTBIT

XX = INSERT COLOR PREFIX: **FP** Fire Pit **GP** Gravel Path **SR** Spiced Rum

DECKING FASTENERS

	TREX® PRODUCT LINES				
	Transcend®	Enhance®	Select®	Accents®	Escapes®
Trex Hideaway® Hidden Fastener	X	X	X	X	X
FastenMaster® TrapEase II Composite Screw	X	X	X	X	
FastenMaster® TrapEase® 3 Ultimate Composite Decking Screw (Available Spring 2014)	X	X	X	X	X
Quick Drive® Composi-Lok Deck Screw				X	
UFO Ballistic NailScrews®				X	
Dexxter® Composite Screw – 6 Lobe Drive Only	X	X	X	X	
Fastenmaster® TrimTop Screw					X
Scrudini™ Hand Drive Screws					X
Camo® Marksman Pro®					X
DeckFast® Cap-Tor® xd/HeadCote® CapTor® xd	X	X	X	X	X
Screw Product C-Deck Exterior Star Drive Composite Deck Screw	X	X	X	X	X
C-Deck Exterior Star Drive Composite Deck Screw (See note below)	X	X	X		
Phillips II Plus® Pozisquare		X	X	X	
Cortex® Conceled Fasteners	X	X	X	X	
Muro® T-Screw Torx Stainless Steel Screw - Collated (TX0212SFD or M-TX0300SEP)	X	X	X	X	

NOTE: *C-Deck screw listed above is also color matched for use with white Trex 1x8 and 1x12 composite fascia.* ***NOTE:*** *Muro T-Screw M-TX0300SEP listed above is approved for 2x6 decking (can also be used with standard 1" (2.5 cm) decking as listed above). This screw is collated and can be used with Muro Auto Feed Screw Gun FDVL41 Speed Driver. (****NOTE:*** *This is not a color match screw.)* For best results, we recommend the above fasteners, which work well and provide an attractive appearance. Unless you are toe screwing, you will not have to pre-drill when you use these screws. *See Framing and Fastening Tips, page 37.*

Trex recommends the use of two screws per joist.

MINIMUM FASTENER SIZE		
	SCREWS	
Profile	Length	No.
1" x 6"	2-1/2" (6.4 cm) or 2-3/4" (7 cm)	#8, #10
2" x 6"	3" (7.6 cm)	#8, #10

1" X 6" (2.5 cm X 15.2 cm), 2" x 6" (5.1 cm x 15.2 cm)

If any condition occurs which is attributable to the use of non-recommended fasteners, such condition shall not be covered under Trex's Limited Warranty.

FastenMaster® TrapEase® II. TrapEase® 3. FastenMaster® TrimTop™. and Cortex® are registered trademarks of OMG. Inc.

Camo® and Marksman Pro® are registered trademarks of National Nail Corp.

Quik Drive® and Dexxter™ are registered trademarks and Composi-Lok™ is a trademark of Simpson Strong-Tie Company. Inc.

NailScrews® is a registered trademark of Universal Fastener Outsourcing, LLC.

Scrudini™ is a trademark of Swan Secure Products. Inc.

DeckFast® CapTor® xd and HeadCote® CapTor® xd are registered trademarks of Starborn Industries Inc.

C-Deck Exterior Star Deck Composite Deck Screw is a product of Screw Products Inc.

Phillips II Plus® is a registered trademark of Phillips Fasteners LLC.

FASTENING TIPS FOR TREX ESCAPES®*

You can fasten Trex Escapes® with the recommended fasteners at least 1/2" (1.25 cm) and not more than 4" (10.2 cm) from the board edge without splitting. **You do not have to pre-drill with Trex Escapes.**

**Use Trex Universal Hideaway® hidden fasteners for Escapes grooved product. This includes additional screws for installation.*

FASTENING TIP FOR TREX ESCAPES®, TREX TRANSCEND®, TREX ENHANCE®, AND TREX® SELECT™

***NOTE:** When using pneumatic or battery-operated equipment, adjust the pressure so that you only shoot the head of the nail to be flush with the board's cap. **DO NOT** shoot the fastener head completely through the cap.*

TREX AND STATIC ELECTRICITY

The buildup of static electricity on a flat surface can affect walking surfaces. This phenomenon can occur in dry climates, where hot dry winds and dust-born particles can create static electricity on the surface of the decking. (This static electricity is the same as when people drag their feet on a dry day or rub a balloon on fur or wool.) In most cases, hosing down the decking surface will dissipate the static charge, however if this continues the deck can be grounded. Consult with an electrician to determine the best methods for this.

TREX PRODUCTS NEAR LOW-E WINDOWS

Low-E glass reflects more sunlight, and it has been observed that the extra reflectivity combined with any concavity in the glass can act like that of a concave mirror, concentrating sunlight onto outdoor objects, including that of decking and railing. This can result in an extreme amount of heat concentrated on areas of the decking surface, which in turn can sometimes char the decking surface or cause the decking to slightly bow.

FRAMING AND FASTENING TIPS

Composite decking is a great alternative to traditional wood decking. When building your deck and railing, it is recommended that code-approved structural material be used as the framing and joists. One option is using Trex Elevations® steel deck framing. *Refer to www.trex.com for more information on Trex Elevations* . Check your local building codes for restrictions. Trex® decking cannot be used for structural applications. **DO NOT** attach Trex decking directly to any solid surface or watertight system. *See Sleeper Systems on page 38.* In most cases, install fasteners at a 90° angle (perpendicular to the board).

At board ends on the deck's edge, you can install screws placed perpendicularly at the recommended distance, at minimum of 1" (2.5 cm) from the board end and edge, without splitting the board.

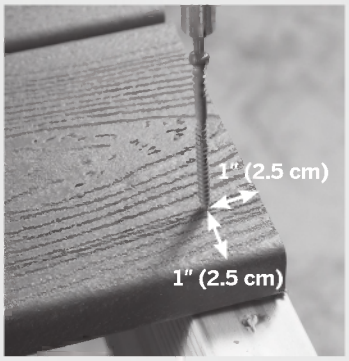

For butt joints, where boards meet over a single joist, add a 2" x 4" (5.1 cm x 10.2 cm) "nailer" board at the butt joint. This allows you to install a screw at a 90° angle.

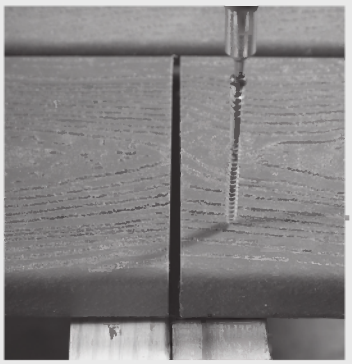

FASCIA FASTENING TIPS

- Trex fascia around the base of a deck must be gapped the same as the decking to allow for air flow.
- Attach the fascia every 12" (30.5 cm) with three Trex approved screws. Place the top screw 1" (2.5 cm) from the top of the rim joist, the second screw at the rim joist's center, and the third screw 1" (2.5 cm) from the bottom of the rim joist.
- A construction grade weather resistant adhesive is also recommended to be used as a **SECONDARY** fastener when attaching fascia.

HIDDEN FASTENER TIPS

Start Clips Needed

You will need 0.75 clips for every lineal foot of decking. For example, 40 feet of decking would require 30 start clips.

0.75 x ____ft of decking = # of start clips

NOTE: *When using hidden fasteners (both start and connector clips), one must be used on every joist.*

Calculating the Number of Connector Clips Needed

- # of joists x # of decking boards = # of connector clips needed.
- Ninety (90) connector clips will cover approximately 50 sq. ft. (103 cm^2) using 5.5" (14 cm) decking boards on 16" (40.6 cm) centers.

CONNECTOR CLIPS NEEDED

Joist Spacing (on center)	Deck Size Square Feet				
	100	200	300	400	500
12" (30.5 cm)	210	441	672	882	1113
16" (40.6 cm)	175	336	512	672	848
24" (66 cm)	110	231	352	462	583

DOCK APPLICATIONS

Trex decking contains no materials that will harm marine life and is safe for the environment. As long as dock is in intermittent contact with water, i.e., splashing and not in continuous direct contact with water, the durability of the Trex decking should not be affected. For docks, a 3/8" (1 cm) width-to-width gap between boards is recommended to allow for increased drainage due to increased contact with water. In addition, stainless steel fasteners should be used. If there is sufficient contact with the dock and gasoline, grounding of the dock is also recommended.

ROOFTOP AND SLEEPER DECK SYSTEMS

Sleeper Deck Systems

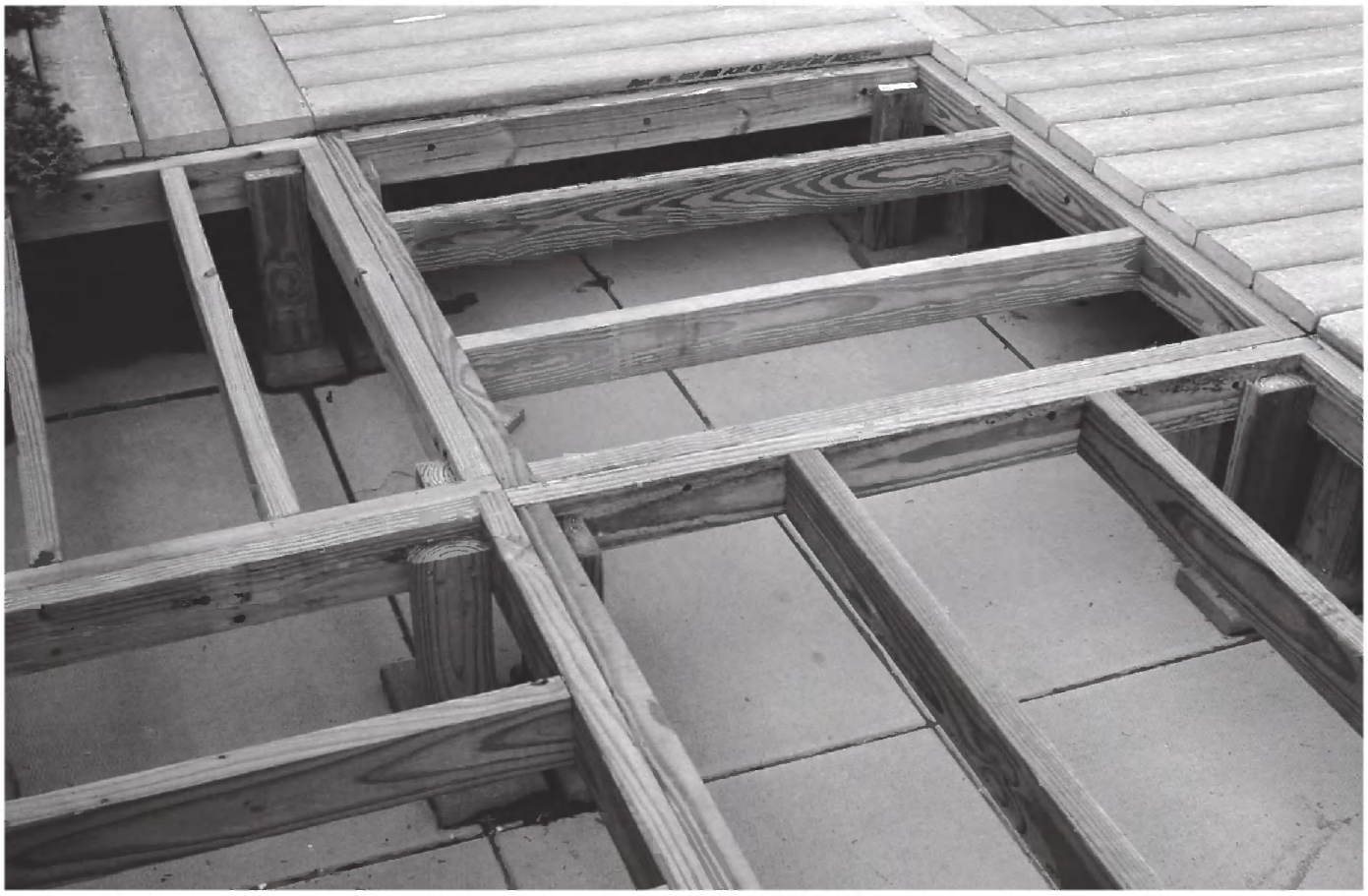

A sleeper system is a buffer between a solid surface and Trex® decking. Drainage, access, and airflow are critical. Water must be able to flow through and away from the deck. For repairs and removal of debris, joist system access is necessary. Good airflow will keep the decking dry and in good condition.

Trex, when used with a sleeper system, must be supported below its entire length and if used in a roofing application, the supports must run the direction of the pitch of the roof to facilitate proper drainage. In addition, sleeper joists must be attached to the roof structure in a manner that stabilizes the deck frame. Failure to do so may result in a poor structure which will compromise deck performance.

In areas of application where a sleeper system is required that would not be susceptible to excessive debris buildup (examples would include covered areas such as balconies, porches, etc.), a minimum height of 1-1/2" (3.8 cm) for pressure-treated joists as well as a minimum 1/4" (0.6 cm) gap between Trex decking would be acceptable. These areas would still have to be designed to allow for proper drainage and hidden fasteners would be acceptable. However, if access to the structure under the decking is required, it would be recommended to use either the universal fastener (plastic) or 2" (5.1 cm) composite decking screws. A 1/4" (0.6 cm) to 1/2" (1.3 cm) gap is still required when abutting walls or other fixed objects.

In all other areas where there could be excessive water buildup along with debris buildup, Trex would recommend a minimum height of 3-1/2" (8.9 cm) for pressure-treated joists, as well as a gap of 3/8" (1 cm). For this application, hidden fasteners would not be recommended and standard 3" (7.6 cm) composite screws would be used.

ALWAYS consult your local building code authority for proper details on roof and railing installation to the roof structure if required.

ROOFTOP DECK TIPS

- » If you want to access the roof, you must build the Trex deck in removable sections or with removable fasteners.
- » You must attach the sleeper joists to the roof structure so that they stabilize the deck frame. Failure to do so may result in a poor structure which will compromise deck performance.

CODE COMPLIANCE

Joist Spanning for Decking

Trex® decking meets all applicable national model building codes. The joists must be spaced on center according to the chart below. Be sure that joists are level and plumb. Trex decking must span at least three joists. For heavy items such as hot tubs, planters, etc., consult a local building engineer or inspector for span recommendations. If you want to minimize the appearance of joists through the spaces between boards, paint the top of your joists black.

Code Listings

Trex complies with major model building codes and has been evaluated by the International Code Council evaluation service.

Trex Complies with these Model Building Codes:

- 1997 Uniform Building Code (UBC).
- 1999/2009 Standard Building Code (SBC).
- 2006/2009 International Residential Code (IRC).
- 2006/2009 International Building Code (IBC).
- International One and Two Family Dwelling Code 1998.
- BOCA® National Building Code/1999 (BNBC).
- Trex decking is included in the National Research Council of Canada's Registry of Product Evaluations. See *trex.com* for CCMC Evaluation Report 13125-R.

For an Materials Safety Data Sheet (MSDS), please visit *trex.com*

ADJUST JOIST SPANNING TO ACCOMMODATE ANGLED DECKING PATTERNS*

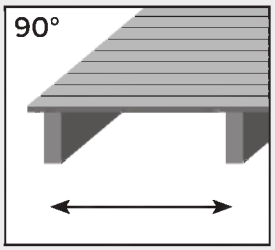

Perpendicular to joists. *See chart below.*

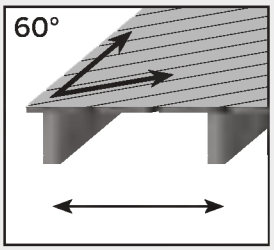

At a 60° angle, maximum joist spanning is 2" (5.1 cm) less than listed in the chart below.

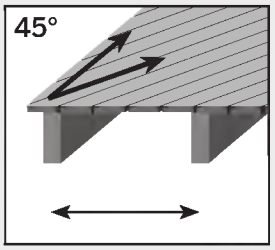

At a 45° angle, maximum joist spanning is 4" (10.2 cm) less than listed in the chart below.

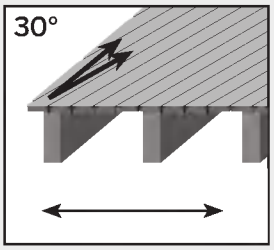

At a 30° angle, maximum joist spanning is 1/2 of the distance listed in the chart below.

Trex Transcend® and Trex Escapes®

Trex Transcend® and Trex Escapes® are compliant with the Wildland-Urban Interface, California State and San Diego County fire codes. For more information, e-mail *question@trex.com* or call 1-800-BUY-TREX (1-800-289-8739).

TREX DECKING SPAN CHART (On Center)			
	Residential Decks, Light Duty Docks, Residential/Day care Playground	Commercial Decks, Boardwalks and Marinas	
Decking Loading	100psf (4826 Pa)	100psf (4826 Pa)	200psf (9576 Pa)
1" (2.5 cm) Boards (including Porch), and .875" (2.2cm) Select Boards	16" (40.6 cm)	16" (40.6 cm)	12" (30.5 cm)
2" x 6" (5.1 cm x 15.2 cm) Boards	24" (70 cm)	24" (70 cm)	16" (40.6 cm)

TREX RAILING SPAN CHART	
	Maximum Railing Span for all Applications (on center of posts)
Transcend, Select, and Reveal Railing	96" (244 cm) on center
Traditional Railing	72" (183 cm) on center

GAPPING

You must gap Trex® decking, both end-to-end and width-to-width. Gapping is necessary for drainage and the slight thermal expansion and contraction of Trex decking boards. Gapping also allows for the shrinkage of the wood joist system.

» **ALWAYS** follow Trex-recommended gapping guidelines.
» Maximum allowable perpendicular overhang for Trex is 4" (10.2 cm) for non-walking surfaces only.
» All decks require air circulation to keep them dry and looking good. To improve air flow, leave openings under the decking or increase gapping to 3/8" (1 cm).

WIDTH-TO-WIDTH GAP	
Above 40°F* (4.5°C)*	1/4" (0.6 cm)
Below 40°F* (4.5°C)*	3/8" (1 cm)

**Temperature at installation.*

END-TO-END/END-TO-WIDTH AND ABUTTING GAP		
	End-to-End/ End-to-Width	**Abutting Gap**
Above 40° F* (4.5 C)*	1/8" (0.3 cm)	1/4" (0.6 cm)
Below 40° F* (4.5 C)*	3/16" (0.5 cm)	1/2" (1.3 cm)

**Temperature at installation.*

When you use the recommended hidden fasteners, the placement of the hidden fastener establishes the designated gap size.

When installing fascia, gapping rules must apply.

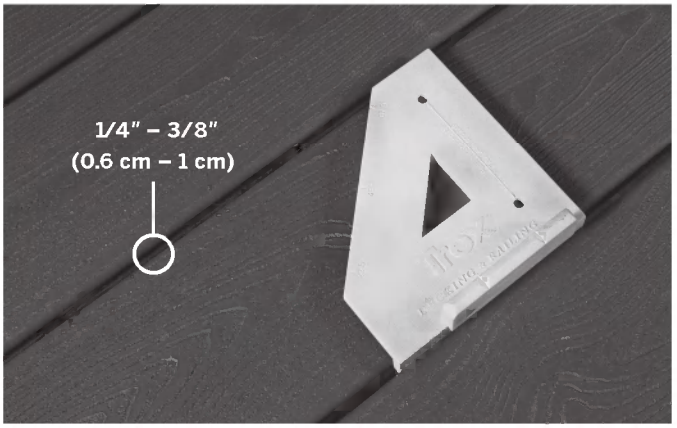

Width-to-Width

The minimum required width-to-width gapping is 1/4" (0.6 cm). When installing in temperatures below 40°F (4.5°C), Trex recommends 3/8" (1 cm) gapping. For docks and heavily wooded areas, Trex recommends a 3/8" (1 cm) gap as well. No gapping should ever exceed 1/2" (1.3 cm).

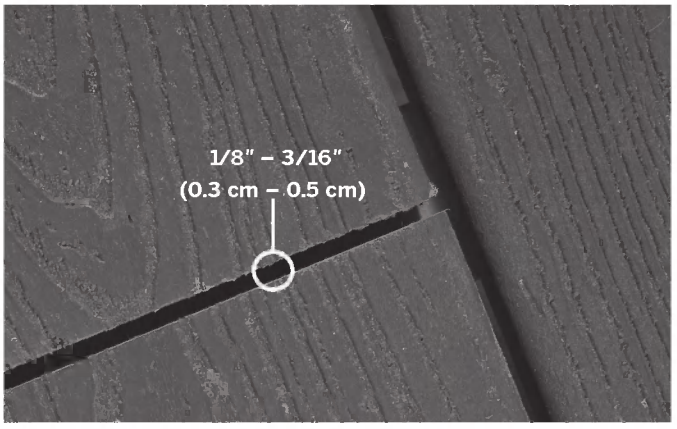

End-to-End/End-to-Width

Gap Trex decking end-to-end, based upon the temperature at installation. *See chart at left.* *For fastening tips, see page 37.*

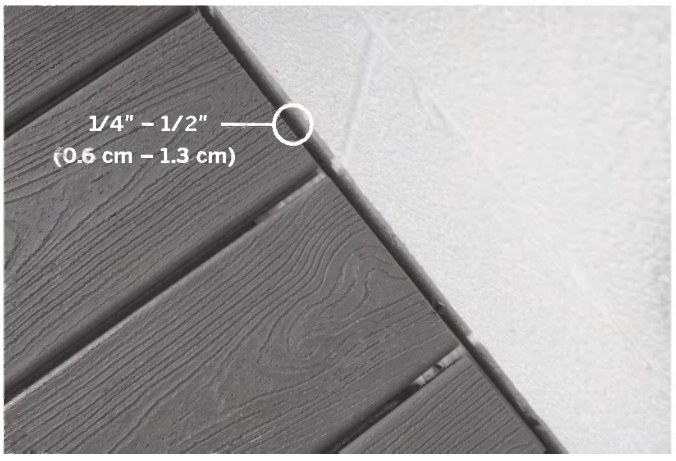

Abutting Solid Objects

When decking is abutting a wall, you must also gap it 1/4" - 1/2" (0.6 - 1.3 cm) depending on the temperature at installation. *See chart at left.*

STAIRS

Stairway Detail

- Stair treads built with Trex® meet requirements by the major national building codes. Consult your local municipality for specific requirements.
- Fasten stair treads continuously across at least four stringers.
- See chart (*at right*) for center-to-center spacing of profiles.
- Dress the sides of the stringers and risers with Trex fascia or trim for a finished look.
- Most model building codes require the stair treads to be constructed under the following requirements:
  - Stairways must be at least 36" (91.5 cm) wide*
  - Stair treads must be at least 11" (28 cm) deep
- Gapping between Trex boards on stair treads must be 1/4" - 3/8" (0.6 cm - 1 cm).
- The overhang of the stair tread is not to exceed 1/2" (1.3 cm).

** For railings that are installed directly over stair treads, the stair treads may need to be larger than 36" wide. Refer to local building code regulations for details prior to installing stairs and railings.*

***NOTE:** Trex rails meet all major building codes for use as a guardrail system. Local municipalities may require a graspable handrail on stairways. Check with your local building code official for local requirements. See Trex ADA Handrail System on pages 125 - 128.*

MAXIMUM SPACING ON CENTER OF JOIST	
2" x 6" (5.1 x 15.2 cm), 1" (2.5 cm) Boards	12" (30.5 cm)
Escapes	9" (24 cm)

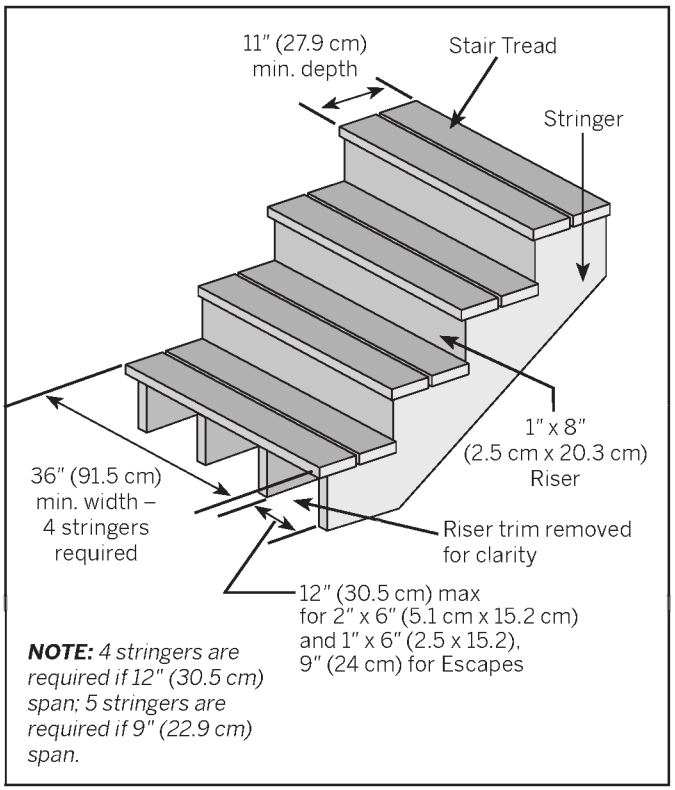

***NOTE:** 4 stringers are required if 12" (30.5 cm) span; 5 stringers are required if 9" (22.9 cm) span.*

TIPS FOR INSTALLING A TREX HIDEAWAY® HIDDEN FASTENING SYSTEM

Installing Angled Deck Boards in Corners

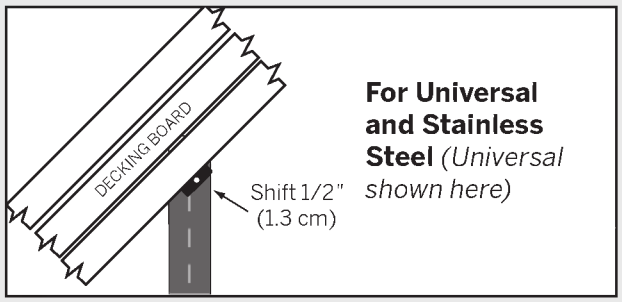

For Universal and Stainless Steel *(Universal shown here)*

ALWAYS start in corner with a small triangular piece of decking at 45° and work outwards. Install Trex Hideaway fasteners 1/2" (1.3 cm) off center to keep fastener screws in middle of joists.

How to Butt Seams

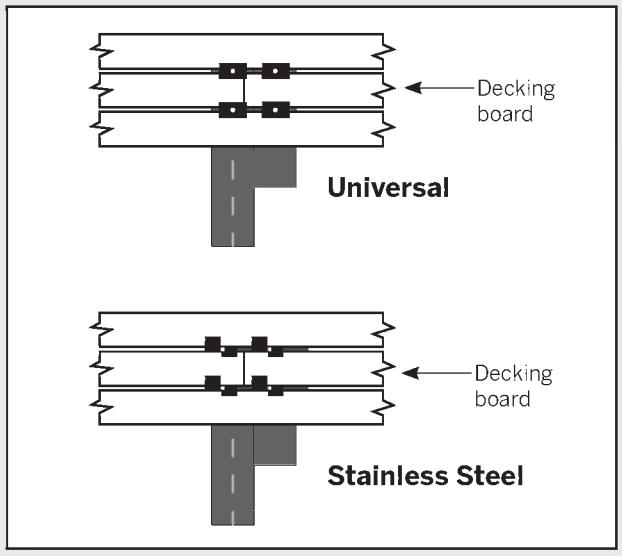

1. Install 10" - 12" (25.4 cm - 30.5 cm) framing boards along joists where seams will butt.
2. Place additional fasteners on the adjacent board over the joist and framing boards where the seam will be.
3. Put the first board of the seam in place and secure with fastener.
4. Butt end of second board to first and secure with fastener.

NOTE: *Follow end-to-end gapping specifications on page 40.*

5. Place second set of fasteners on each side of butt seam for next board.

Routing Square Edge Boards for Trex Hideaway Fasteners

NOTE: *The following Trex Square Edge decking boards (Trex Transcend®, Trex Enhance®, Trex Escapes®, Trex Accents®, and Trex Select®), either 1x6 or 2x6, can be routed.*

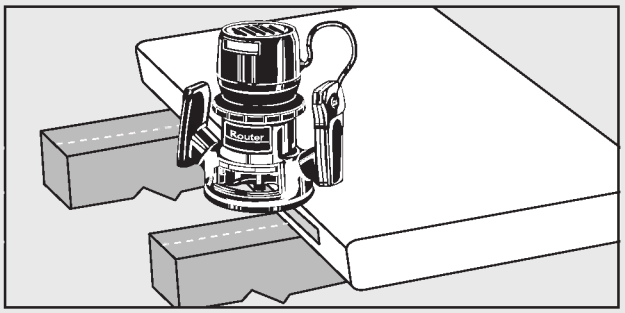

Using a Trex router bit/groove cutter available at your local Trex dealer:

1. Rout from bottom side of board.
2. Rout the entire length of the board, or at every intersection where the board is over support joists.

NOTE: Hidden Fasteners MUST be used at every joist.

HOW TO INSTALL TREX HIDEAWAY® STAINLESS STEEL FASTENERS
(TREX TRANSCEND®, ENHANCE®, ACCENTS®, AND SELECT®)

NOTE: *Cannot be used for Trex Escapes®.*

PARTS

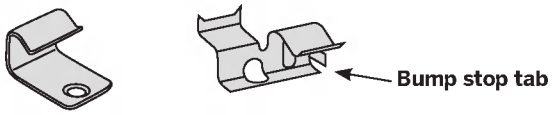

TOOLS NEEDED

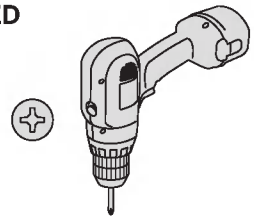

NOTE: *Maximum spacing of deck boards using the Hideaway system is 16" (40.6 cm) on center. Fasteners provide 1/4" (0.6 cm) gap when installed correctly.*

Installing Start Clips and First Board

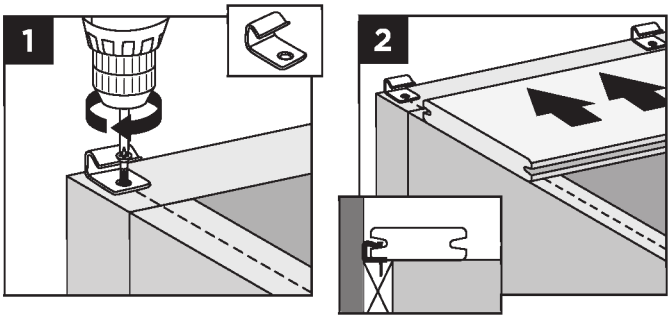

1. Install start clips on edge of ledger board, centered on each joist. Secure clips with screws.
2. Push grooved edge of deck board into start clips. **Important:** First deck board **MUST** be straight and well secured.

Installing Stainless Steel Connector Clips

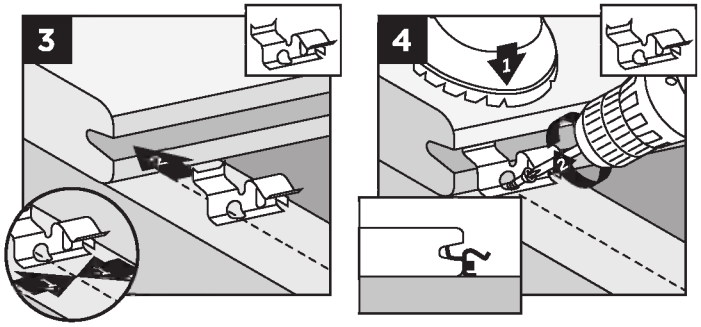

3. Insert connector clip into grooved edge of deck board at approximate 45° angle by seating the teeth in the top of the groove.
4. Center connector clip on joist and secure with screw *(provided)* at 45° angle while standing on board and applying pressure to clip. Install one connector clip on each joist. **Connector clips MUST be vertical to deck boards with screws securing clips in board's grooved edge.**

Installing Second Board

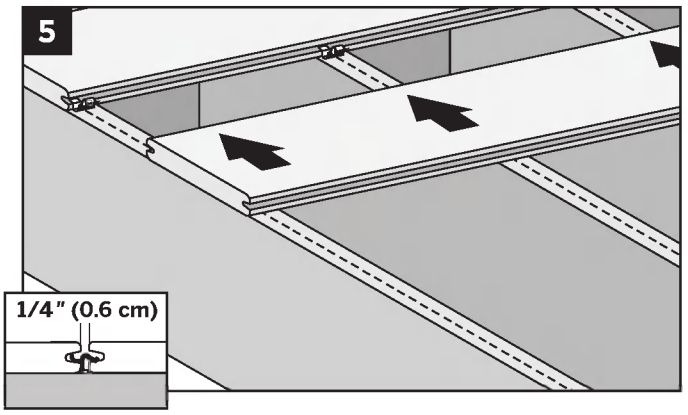

5. With next deck board in position and 2" (5.1 cm) from connector clips, push the boards with enough force to fully seat the clips in its grooved edge. Check gaps between boards. Fully engaged, the connector clip's bump stop tab provides a consistent 1/4" (0.6 cm) gap.

Installing the Last Board

Option 1:
Using a Fascia Board

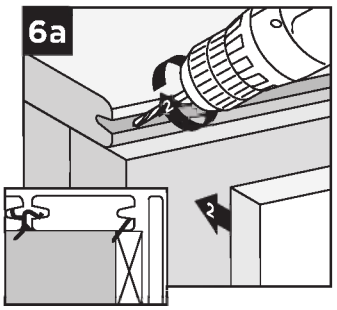

6a. Pre-drill pilot holes at an angle through grooved edge of deck board into ledger board. Install 2-1/2" (6.4 cm) decking screw using pilot holes to secure. Attach a fascia board flush with deck surface.

Option 2:
With Deck Board Overhang

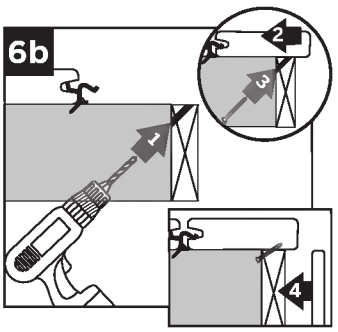

6b. Pre-drill pilot holes at 45° angle from below deck surface through rim joist. Seat last board into fasteners overhanging rim joist. Secure last board with 2-1/2" (6.4 cm) decking screws using pilot holes. Position fascia board below overhanging deck board.

HOW TO INSTALL TREX HIDEAWAY® UNIVERSAL HIDDEN FASTENERS

(TREX TRANSCEND®, ENHANCE®, ESCAPES®, ACCENTS®, AND SELECT®)

NOTE: *See page 45 for additional instructions if installing Escapes.*

PARTS

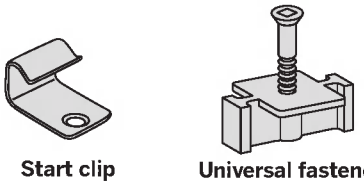

Start clip — Universal fastener

TOOLS NEEDED

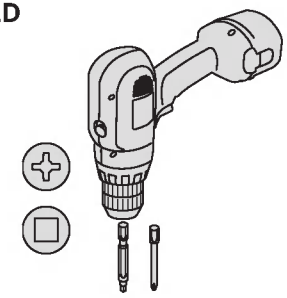

NOTE: *Maximum spacing of deck boards using Hideaway system is 16" (40.6 cm) on center. Fasteners provide 1/4" (0.6 cm) gap when installed correctly.*

Installing Start Clips and First Board

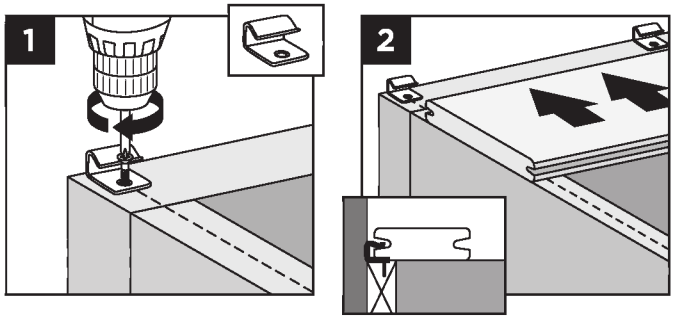

1. Install start clips on edge of ledger board, centered on each joist. Secure clips with screws.
2. Push grooved edge of deck board into start clips. **Important:** First board **MUST** be straight and well secured.

Installing Universal Fasteners

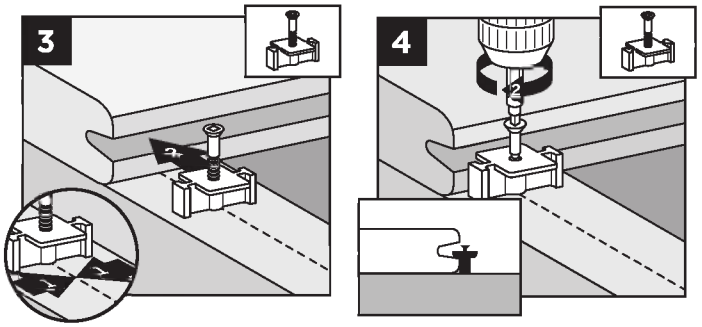

3. Insert fastener into grooved edge of deck board.
4. Align screw hole in fastener with center of joist. Continue along the length of the board at every joist.

NOTE: *Screw only halfway down.* ***DO NOT*** *fully tighten.*

Installing Second Board

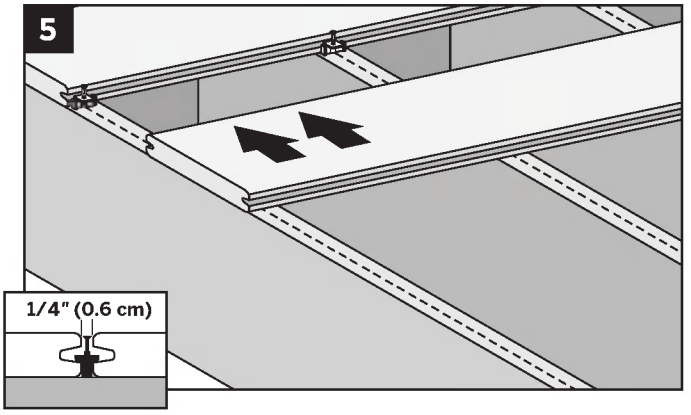

5. Slide second board into place, making sure fasteners fit into groove. Install the next universal fastener on the other side of the second board in the same manner as Steps 3 and 4. ***DO NOT*** *fully tighten the screw.*

Complete Installation

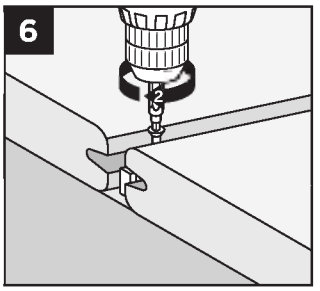

6. Tighten screws on fasteners in first row. Proceed with Steps 3 through 5, tightening down each row after board that follows is in place. Be sure to use a long #1 square bit.

Installing Last Board

Option 1:
Using Fascia Board

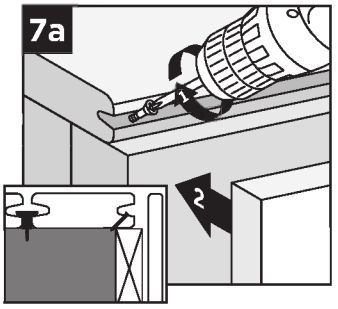

7a. Pre-drill pilot holes at an angle through grooved edge of deck board into ledger board. Install 2-1/2" (6.4 cm) screws through pilot holes to secure. Attach a fascia board flush with deck surface.

Option 2:
With Deck Board Overhang

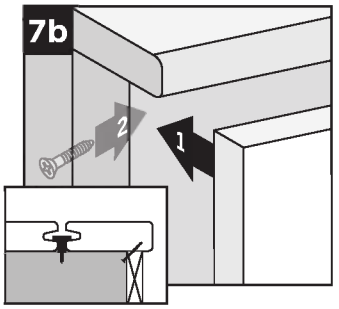

7b. Pre-drill pilot holes at 45° angle from below deck surface through rim joist. Seat last board into fasteners overhanging rim joist. Secure board with 2-1/2" (6.4 cm) screws using pilot holes. Position fascia board below overhanging deck board.

HOW TO INSTALL ESCAPES® BOARDS
WITH TREX HIDEAWAY® UNIVERSAL FASTENERS

1. Follow Steps 1 and 2 for installing start clips and first board. *See page 44.*
2. At both ends and center of first board, toenail screw (provided with Escapes universal hidden fasteners), at an angle through grooved edge of deck board.

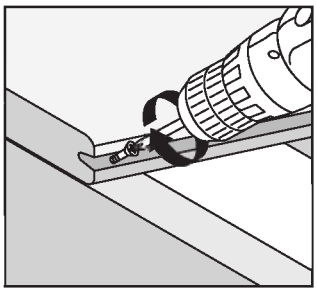

3. Follow Steps 3-5 for installing universal fasteners. *See page 44.*
4. For every consecutive board installed, toenail screw at an angle through grooved edge of deckboard as stated in Step 2.
5. Follow remaining steps for completing installation and installing last board. *See page 44.*

HOW TO REPLACE TREX® BOARDS
INSTALLED WITH STAINLESS STEEL (TREX TRANSCEND®, ENHANCE®, ACCENTS®, AND SELECT®)

Stainless Steel Fasteners

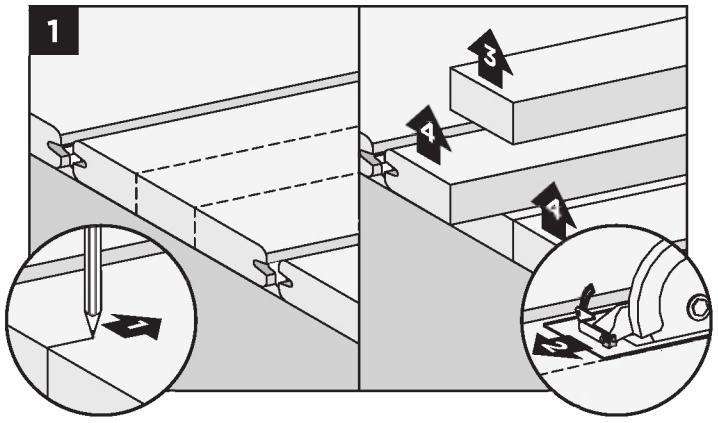

1. Mark the board to be replaced in thirds. Cut each side of middle section and remove it. Remove remaining two sections.

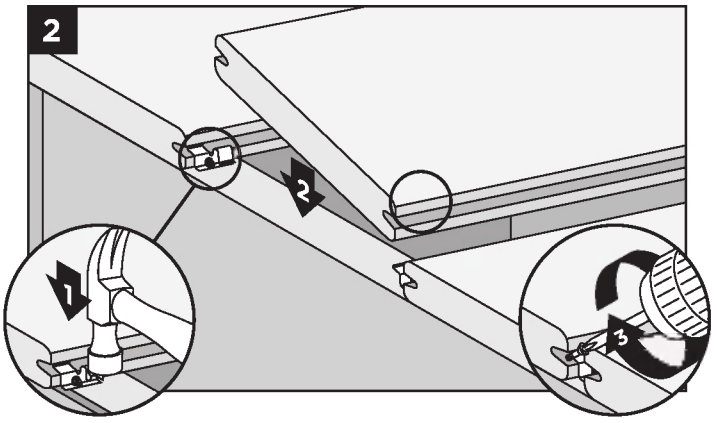

2. Hammer down the exposed side of the connector clips. Place the new board into position using a pry bar to maneuver it into place. Secure board on grooved edge with finish nails, screws or use counter drill, screws and plugs.

HOW TO REPLACE TREX® BOARDS
INSTALLED WITH TREX HIDEAWAY® UNIVERSAL FASTENERS (TREX TRANSCEND®, ENHANCE®, ESCAPES®, ACCENTS®, AND SELECT®)

Universal Fasteners

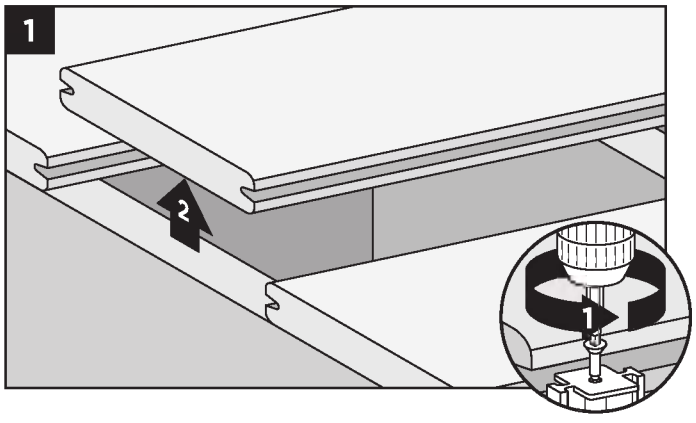

1. Remove screws from fasteners on both sides of board to be replaced and remove board.

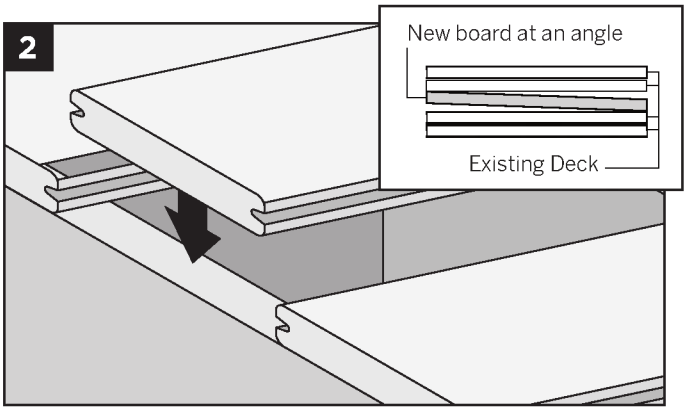

2. Angle new board to place. *See inset box (above).*

HOW TO REPLACE TREX® BOARDS/CONTINUED
INSTALLED WITH TREX HIDEAWAY® UNIVERSAL FASTENERS (TREX TRANSCEND®, ENHANCE®, ESCAPES®, ACCENTS®, AND SELECT®)

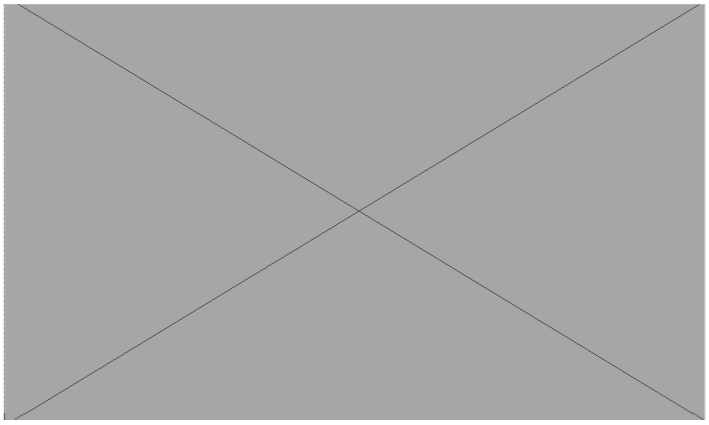

Universal Fasteners

3. Slide a fastener for each joist into board grooves from both ends of the board.

NOTE: *You may have to loosen adjacent boards to slide fasteners into position.*

4. Position replacement board and secure fasteners on center of each joist.

HOW TO INSTALL STAIR TREADS
(TREX TRANSCEND, ENHANCE, ESCAPES, ACCENTS, AND SELECT)

Installation Options
NOTE: *For best results, use square edge decking and manually route sides that will be used to attach hidden fasteners.*

Option 1: Face Screw
1. Install start clips against riser on each step.
2. Install first board. *Follow steps on pages 43-44.*
3. Install second board. *Follow steps on pages 43-44.*
4. Secure with screws from top of second board into stringer boards.

Option 2: Using 2" x 4" (5.1 cm x 10.2 cm) Wood Support Blocks
1. Install start clips against riser on each stair tread.
2. Install first board. *Follow steps on pages 43-44.*
3. Attach 2" x 4" (5.1 cm x 10.2 cm) blocks between stringers.
4. Pre-drill holes up through blocks.
5. Install second board. *Follow steps on pages 43-44.*
6. Secure with screws from bottom through blocks and into stair treads.

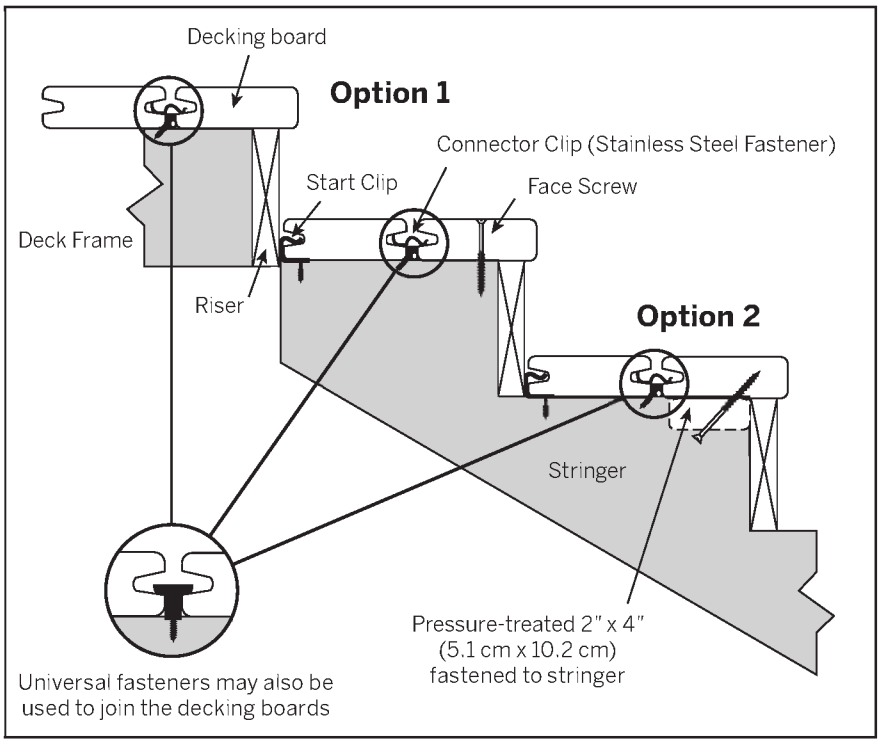

HOW TO INSTALL TREX TRANSCEND® PORCH FLOORBOARDS

NOTE: *When installing Trex Porch Floorboards in a non-covered environment, the porch structure should be slightly sloped to help allow for proper drainage. Joists should be sloped 1/8" (0.3 cm) per foot away from the house to facilitate drainage. Refer to your local building code official for recommendations BEFORE building sub-structure. When installing Trex Porch Floorboards under cover of a roof, no slope is required.*

PARTS

Start clip

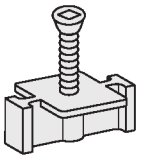

Universal fastener

TOOLS NEEDED

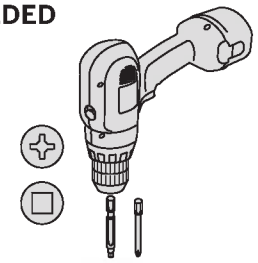

NOTE: *Refer to page 39 for proper joist spanning requirements.*

Installing Start Clips and First Porch Floorboard

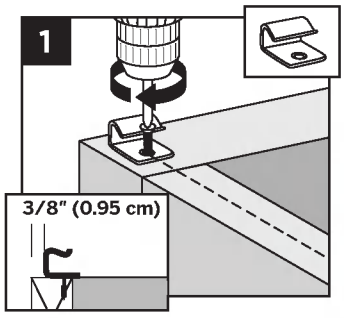

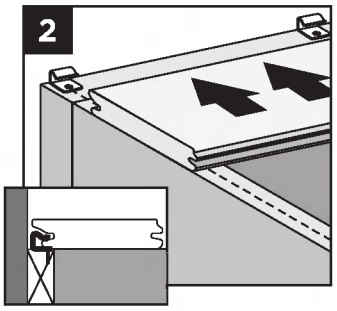

1. Measure 3/8" (1 cm) off of edge of ledger board, and install start clip onto ledger board, centered on each joist. Secure clips with screws.
2. Push grooved edge (longer edge side) of porch floorboard into start clips. **Important:** First board **MUST** be straight and well secured.

Installing Trex Hideaway® Universal Fasteners

3. Insert fastener into grooved edge (shorter edge side) of porch floorboard, making sure to align screw hole in fastener with center of each joist.

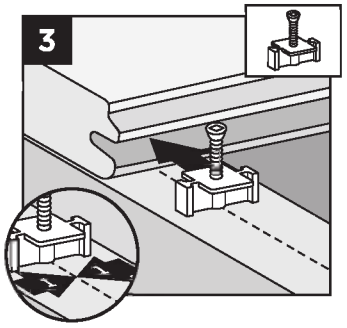

4. **IT IS SUGGESTED THAT IN ORDER TO KEEP THE FASTENER STRAIGHT AND SECURE, CUT AN 18" (45.7 cm) PIECE OF PORCH FLOORBOARD SCRAP BOARD AND USE THIS AS AN AID (USE SMALLER LIP SIDE) TO HELP HOLD THE HIDDEN FASTENER DOWN BEFORE SCREWING THIS IN.** This will help make sure the fastener stays fully straight for remaining boards to be attached.

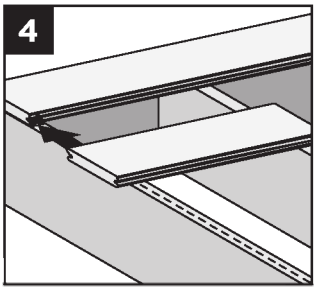

5. Fully tighten (but **DO NOT** over tighten) the screw into each joist while keeping the scrap board in firm place against the hidden fastener.

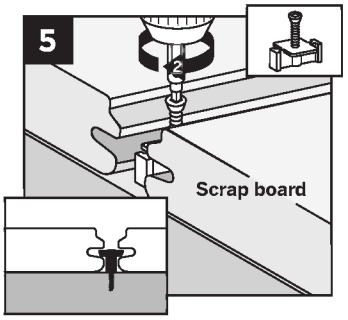

Installing Second Porch Floorboard

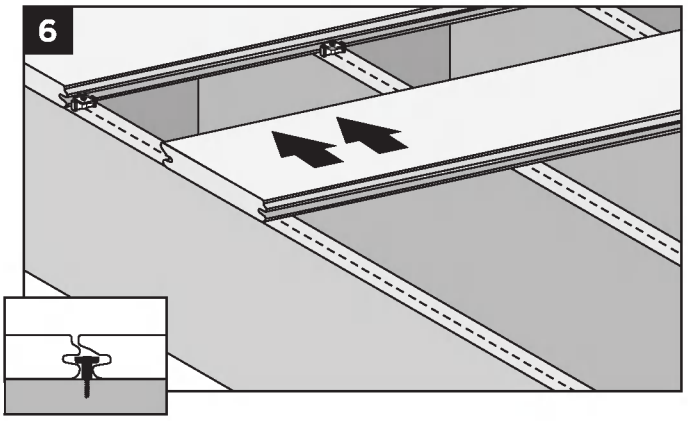

6. Slide second porch floorboard into place, making sure fasteners fit into groove. Install the next universal fastener on the other side of the second porch floorboard in the same manner as Steps 3 - 5.

Installing Last Porch Floorboard

Option 1:
Using Fascia Board

7a. Pre-drill pilot holes at an angle through grooved edge of porch floorboard into ledger board. Install 2-1/2" (6.4 cm) screws through pilot holes to secure. Attach fascia board flush with porch floorboard surface.

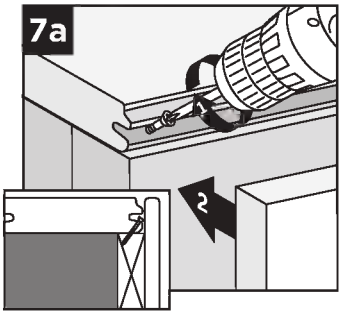

NOTE: *In most cases there will be additional screws that come with the Trex Hideaway® Universal Hidden Fasteners. These screws can also be used for attachment of the last board in the method shown above.*

Option 2:
With Porch Floorboard Overhang

NOTE: *This side of porch floorboard will have to be cut flush to not show grooves. Note that color of porch floorboard will be slightly different at cut edge.*

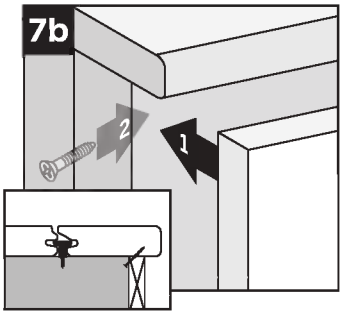

7b. Pre-drill pilot holes at 45° angle from below deck surface through rim joist. Seat last porch floorboard into fasteners overhanging rim joist. Secure porch floorboard with 2-1/2" (6.4 cm) screws using pilot holes. Position fascia board below overhanging porch floorboard.

HOW TO INSTALL PORCH STAIR TREADS

NOTE: Use square edge composite decking boards and manually route these on one side to allow for use with hidden fasteners.

Option 1: Using Hidden Fasteners and Face Screwing

1. Install start clips against riser on each step.
2. Install first board. *Follow steps on pages 43-44.*
3. Install second board. *Follow steps on pages 43-44.*
4. Secure with screws from top of second board into stringer boards.

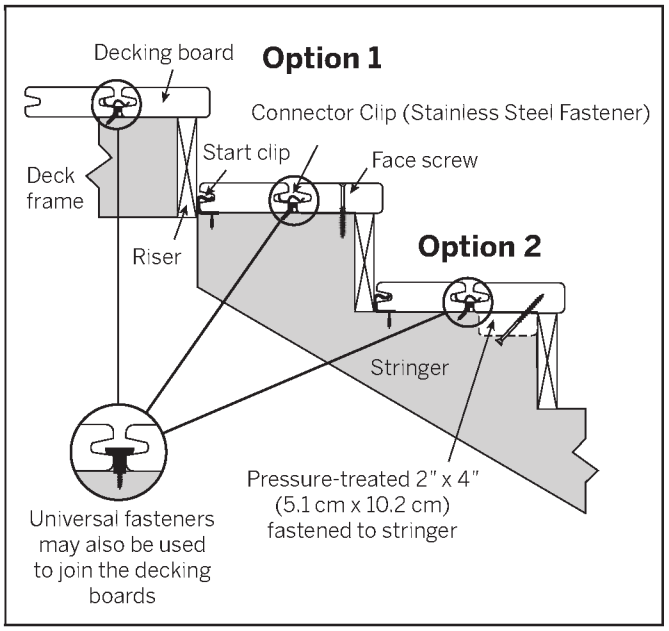

Option 2: Using Hidden Fasteners and 2" x 4" (5.1 cm x 10.2 cm) Wood Support Blocks

1. Install start clips against riser on each stair tread. *Follow steps on pages 43-44.*
2. Install first board. *Follow steps on pages 43-44.*
3. Attach 2" x 4" (5.1 cm x 10.2 cm) blocks between stringers.
4. Pre-drill holes up through blocks.
5. Install second board. *Follow steps on pages 43-44.*
6. Secure with screws from bottom through blocks and into stair treads.

HOW TO INSTALL POST MOUNTS ON DECK BOARD

NOTE: *Cannot be used with Trex Transcend® Classic railing, Trex Traditional railing styles or Trex Reveal Railing.*

NOTE: *If using Trex 48" (121.9 cm) newel post, a post mount system must be used.*

PARTS

- (1) Post mount
- (2) Guide blocks
- (4) 5/16" x 6" (0.8 cm x 15.2 cm) Hex (mounting) bolts
- (4) 5/16" x 1" (0.8 cm x 2.5 cm) Hex (leveling) bolts
- (1) Leveling plate
- (1) Back plate
- (8) Flat washers
- (4) Hex nuts
- (4) 3/4" (1.9 cm) Self-tapping screw
- (8) 1-1/2" (3.8 cm) Stainless steel screws
- (8) 2" (5.1 cm) Stainless steel screws

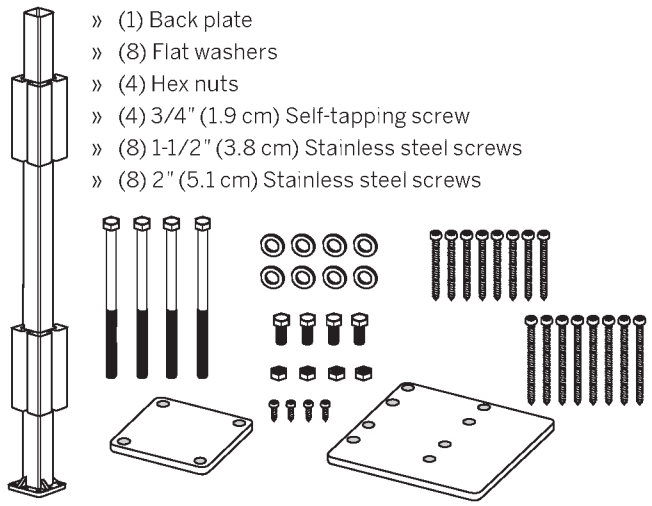

TOOLS NEEDED

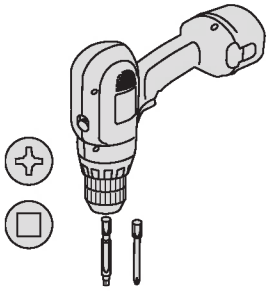

Install Blocking at Post Location

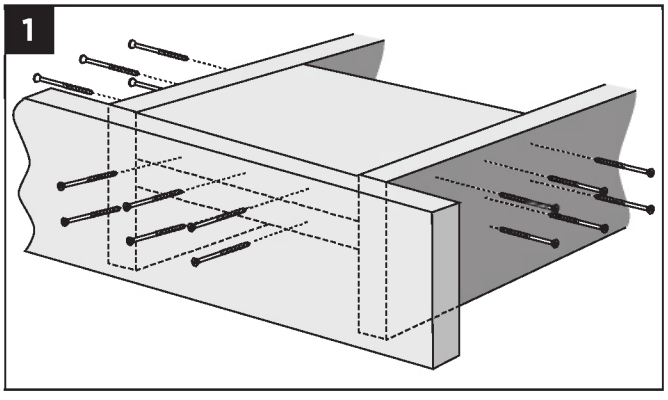

1. Install at least two 2" x 8" (5.1 cm x 20.3 cm) boards as blocking under post location. Securely attach blocking using wood screws, penetrating blocking a minimum of 1-1/2" (3.8 cm).

Position Leveling Plate

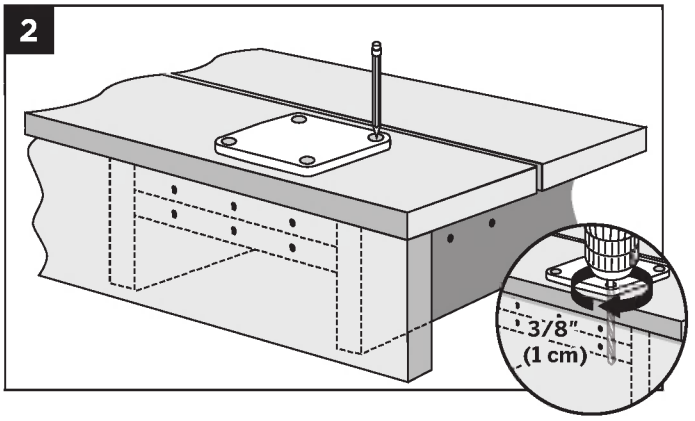

2. Using leveling plate as a template, mark locations of the four holes. Drill through decking and blocking using a 3/8" (1 cm) diameter drill bit.

Place and Level Post Mount

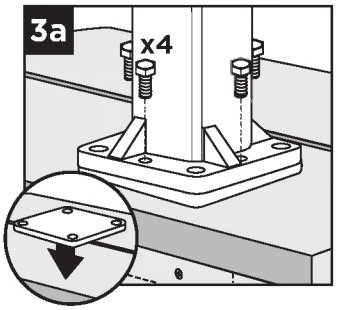

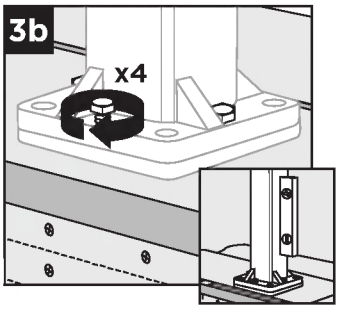

3a. Partially thread four 5/16" x 1" (0.8 cm x 2.5 cm) hex (leveling) bolts through center holes in post mount. Place leveling plate on decking surface with holes aligned.

3b. Place post mount on leveling plate and adjust 5/16" x 1" (0.8 cm x 2.5 cm) hex bolts to plumb.

Installing Mounting Bolts and Back Plate

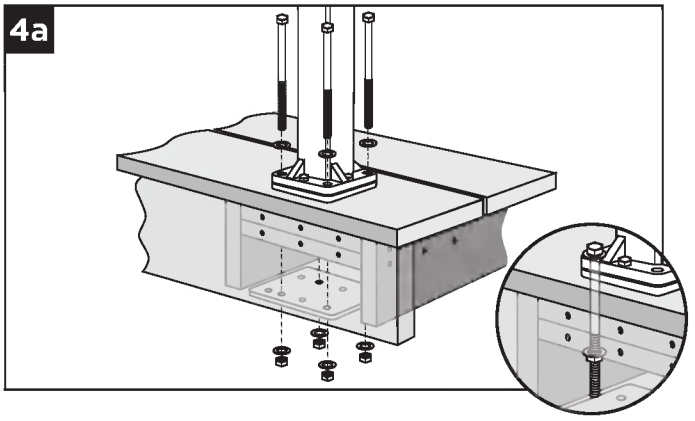

4a. Thread the 5/16" x 6" (0.8 cm x 15.2 cm) hex (mounting) bolts through the post mount, leveling plate, and blocking. Place back plate on underside with mounting bolts through appropriate holes and secure with washers and hex nuts.

HOW TO INSTALL POST MOUNTS ON DECK BOARDS/CONTINUED

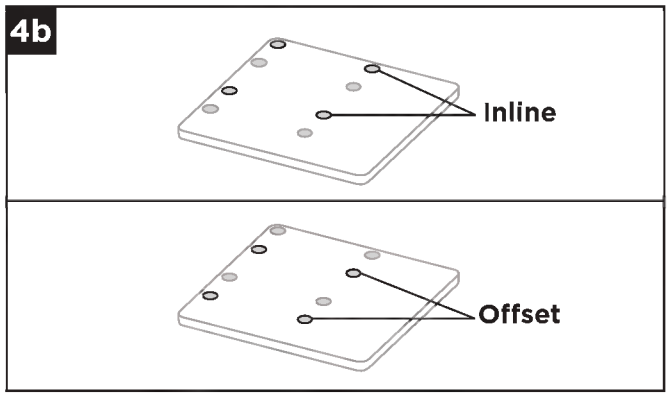

4b. Use center holes for inline applications and offset holes for corner applications.

Install Guide Blocks

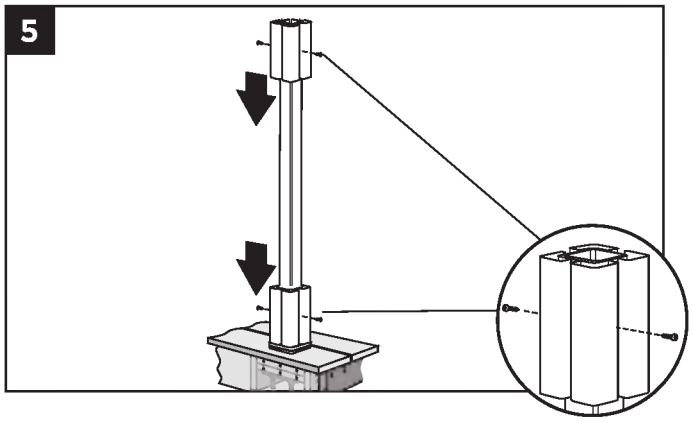

5. Place the two guide blocks onto post mount. Insert self-tapping screws *(provided)* to secure.

Install Railing System of Choice

NOTES: *If installing a Trex® railing system:*

- *Mark screw placement on post sleeve for the rail support brackets (RSBs).*
- *Pre-drill screw holes through post sleeve and aluminum guide blocks with a 1/8" (0.3 cm) drill bit.*
- *Attach RSBs using 1-1/2" (3.8 cm). screws (provided) for 4" x 4" (10.2 cm x 10.2 cm) Trex post sleeves.*
- *Attach RSBs using 2" (5.1 cm) screws (provided) for 6" x 6" (15.2 cm x 15.2 cm) Trex post sleeves.*

NOTE: *If installing Trex Decklighting™ on posts, drill hole through bottom plate as well as any support blocks to allow wiring for lights to be below surface of the decking.*

DECKING:
HOW TO INSTALL POST MOUNTS ON CONCRETE

NOTE: *Cannot be used with Trex Transcend® Classic railing or Trex Traditional railing styles.*

PARTS

- (1) Post mount
- (2) Guide blocks
- (4) 3/8" x 3" (0.8 cm x 15.2 cm) Concrete bolts
- (4) 5/16" x 1" (0.8 cm x 2.5 cm) Hex (leveling) bolts
- (1) Leveling plate
- (4) Flat washers
- (4) 3/4" (1.9 cm) Self-tapping screw
- (8) 1-1/2" (3.8 cm) Stainless steel screws
- (8) 2" (5.1 cm) Stainless steel screws

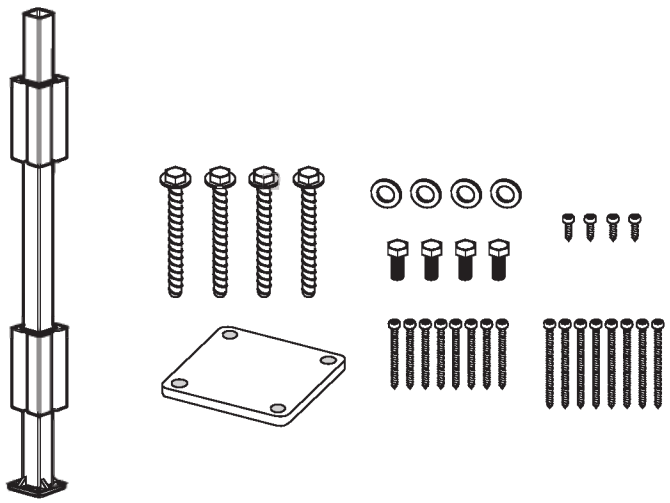

TOOLS NEEDED

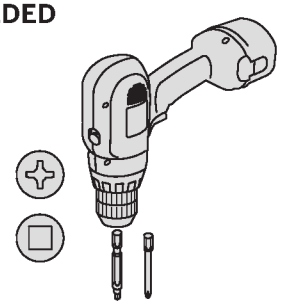

Position Leveling Plates

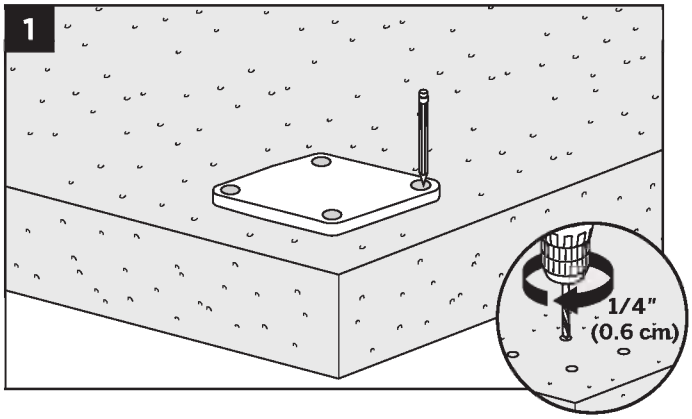

1. Using leveling plate as a template, mark locations of the four holes and drill into concrete at least 3-1/2" (8.9 cm) using a 1/4" (0.6 cm) masonry bit.

Install Leveling Bolts and Level Post Mount

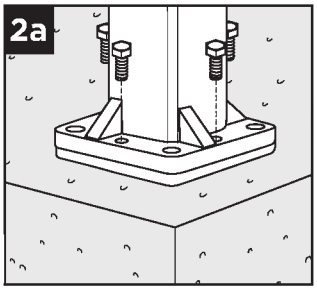

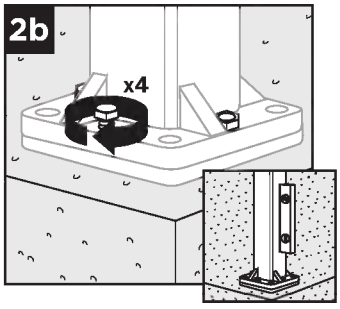

2a. Partially thread four 5/16" x 1" (0.8 cm x 2.5 cm) hex (leveling) bolts in post mount. Place leveling plate on concrete holes aligned.

2b. Place post mount on leveling plate and adjust 5/16" x 1" (0.8 cm x 2.5 cm) hex (leveling) bolts to plumb.

Install Mounting Bolts

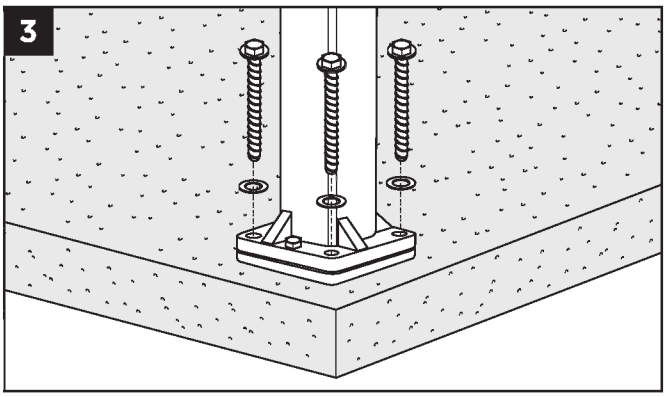

3. Secure post mount with four concrete bolts and washers.

NOTE: *Torque recommended is 5 - 10 ft. lbs.*

Install Guide Blocks

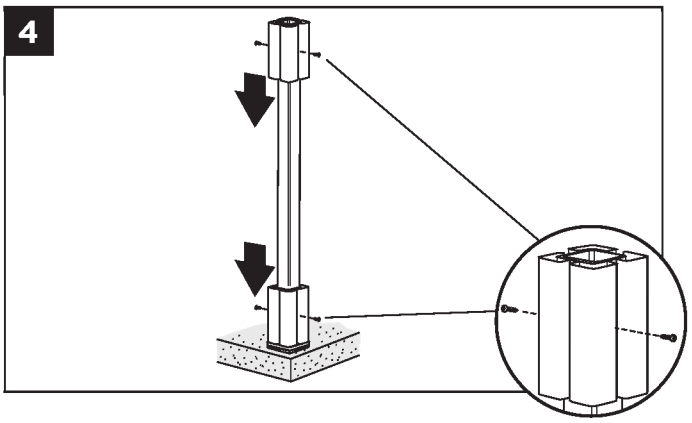

4. Place the two guide blocks on post mount and secure with self-tapping screws *(provided)*.

Install Railing System of Choice

NOTES: *If installing a Trex® railing system:*

» *Mark screw placement on post sleeve for the rail support brackets (RSBs).*

» *Pre-drill screw holes through post sleeve and aluminum guide blocks with a 1/8" (0.3 cm) drill bit.*

» *Attach RSBs using 1-1/2" (3.8 cm) . screws (provided) for 4" x 4" (10.2 cm x 10.2 cm) Trex post sleeves.*

» *Attach RSBs using 2" (5.1 cm) screws (provided) for 6" x 6" (15.2 cm x 15.2 cm) Trex post sleeves.*

RAILING

TREX TRANSCEND® RAILING SPECIFICATIONS AND PROFILES

PART	DESCRIPTION	ITEM NUMBER	COLORS
Post Sleeve/Porch Post/ Newel Post *(Each 4" x 4" and 6" x 6" post sleeve fits over a 4" x 4" pressure-treated post.)* 	4" x 4" x 39" (10.2 cm x 10.2 cm x 99.1 cm) Post sleeve *[4.45" x 4.45" x 40" (113 mm x 113 mm x 1016 mm) external dimensions]* 4" x 4" x 108" (10.2 cm x 10.2 cm x 2.74 m) Post sleeve *[4.45" x 4.45" x 108" (113 mm x 113 mm x 2743 mm) external dimensions]* *(Each 4" x 4" (10.2 cm x 10.2 cm) post sleeve includes a corrugated TrexExpress™ Railing assembly tool.)* 6" x 6" x 39" (15.2 cm x 15.2 cm x 99.1 cm) *[5.5" x 5.5" x 39" (140 mm x 140 mm x 991 mm) external dimensions]* 6" x 6" x 108" (15.2 cm x 15.2 cm x 274.3 cm) *[5.5" x 5.5" x 108" (140 mm x 140 mm x 2743 mm) external dimensions]*	XX040439APS XX0404108APS WT060639APS WT0606108APS	WT, BK, TH, VL, GP, FP, RS WT WT
Post Mount 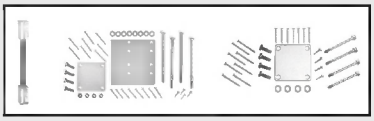	36" (91.4 cm) Post surface mount 42" (1.07 m) Post surface mount Post surface mount hardware - Concrete (10 kits/box) Post surface mount hardware - Wood (10 kits/box)	POSTMOUNT36 POSTMOUNT42 POSTHDWCONC POSTHDWWOOD	
Post Sleeve Skirt 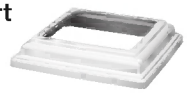	4" x 4" (10.2 cm x 10.2 cm) Post sleeve skirt *[4.55" x 4.55" (114 mm x 114 mm) internal dimensions]* 6" x 6" (15.2 cm x 15.2 cm) Post sleeve skirt *[5.6" x 5.6" (142 mm x 142 mm) internal dimensions]*	XXSKIRT4X4 WTSKIRT6X6	WT, BK, TH, VL, GP, FP, RS WT
Post Sleeve Cap *Also available with LED lighting. See page 22.* 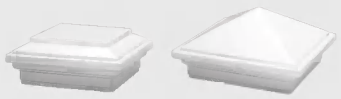	Flat 4" x 4" (10.2 cm x 10.2 cm) Post sleeve cap (12/box) Pyramid 4" x 4" (10.2 cm x 10.2 cm) Post sleeve cap (12/box) *[4.55" x 4.55" (114 mm x 114 mm) internal dimensions]* Flat 6" x 6" (15.2 cm x 15.2 cm) Post sleeve cap (12/box) Pyramid 6" x 6" (15.2 cm x 15.2 cm) Post sleeve cap (12/box) *[5.6" x 5.6" (142 mm x 142 mm) internal dimensions]*	XXSQCAP4X4 XXPYCAP4X4 WTSQCAP6X6 WTPYCAP6X6	WT, BK, TH, VL, GP, FP, RS WT WT
Railings Crown Universal Beveled	6' (1.83 m) Crown top rail 8' (2.44 m) Crown top rail 6' (1.83 m) Universal top/Bottom rail 8' (2.44 m) Universal top/Bottom rail 6' (1.83 m) Beveled top/Bottom rail *(Actual length of 6' rail is 67.5" (1715 mm). Actual length of 8' rail is 91.5" (2.32 m).)*	XXCROWNTR06 XXCROWNTR08 XXUNIVTBR06 XXUNIVTBR08 XXBEVELTBR06	WT, BK, TH, VL, GP, FP, RS WT, BK, TH, VL, GP, FP, RS WT, BK, TH, VL, GP, FP, RS
Balusters/Spindles 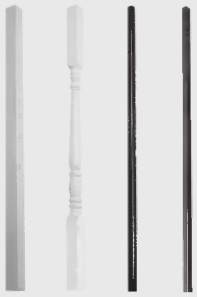	Square balusters for 36" rail height (16/pack) *[1.418" x 1.418" x 30.375" (36 mm x 36 mm x 772 mm) actual dimensions]* Square balusters for 42" rail height (16/pack) *[1.418" x 1.418" x 36.375" (36 mm x 36 mm x 924 mm) actual dimensions]* Colonial spindles for 36" rail height (16/pack) *[1.418" x 1.418" x 30.375" (36 mm x 36 mm x 772 mm) actual dimensions]* Colonial spindles for 42" rail height (16/pack) *[1.418" x 1.418" x 36.375" (36 mm x 36 mm x 924 mm) actual dimensions]* Round aluminum balusters for 36" rail height (20/pack) *[.75" x 30.25" (19 mm x 768 mm) actual dimensions]* Round aluminum balusters for 42" rail height (20/pack) *[.75" x 36.25" (19 mm x 921 mm) actual dimensions]* Square aluminum balusters for 36" rail height (20/pack) *[.75" x 30.25" (19 mm x 768 mm) actual dimensions]* Square aluminum balusters for 42" rail height (20/pack) *[.75" x 36.25" (19 mm x 921 mm) actual dimensions]* *(See chart below for number of balusters needed to complete each railing section.)*	XX020230SBK XX020236SBK WT020230CSP WT020236CSP XXTA30RBK XXTA36RBK XXTA30SBK XXTA36SBK	WT, BK, TH, VL, GP, FP, RS WT, BK, TH, VL, GP, FP, RS WT WT BK, WT, BZ BK, WT, BZ BK, WT, BZ BK, WT, BZ ***NOTE:*** *Aluminum balusters are available in Charcoal Black. Classic White. and Bronze ONLY*

BALUSTER TYPE	PER 6' SECTION	PER 8' SECTION
Square & Colonial (horizontal application)	13	18
Square & Colonial (stair application)	11	15
Aluminum (horizontal application)	15	20
Aluminum (stair application)	12	16

TREX TRANSCEND® RAILING SYSTEMS

RAILING SYSTEM	DESCRIPTION	ITEM NUMBER	COLORS
Accessory Infill Kit • (2) Baluster spacers • Adjustable foot block • Mounting hardware (6' Rail: 67.5" (1715 mm) actual length; 8' Rail: 91.5" (2324 mm) actual length)	6' (1.83 m) Accessory infill Kit for square/ colonial balusters—Horizontal	XXSQHIK06	WT, BK, TH, VL, GP, FP, RS
	6' (1.83 m) Accessory infill Kit for square/ colonial balusters— Stair	XXSQSIK06	WT, BK, TH, VL, GP, FP, RS
	8' (2.43 m) Accessory infill kit for square/ colonial balusters—Horizontal	XXSQHIK08	WT, BK, TH, VL, GP, FP, RS
	8' (2.43 m) Accessory infill kit for square/ Colonial balusters—Stair	XXSQSIK08	WT, BK, TH, VL, GP, FP, RS
	6' (1.83 m) Accessory infill kit for round aluminum balusters—Horizontal	XXRDHIK06	WT, BK, TH, VL, GP, FP, RS
	6' (1.83 m) Accessory infill kit for round aluminum Balusters—Stair	XXRDSIK06	WT, BK, TH, VL, GP, FP, RS
	8' (2.43 m) Accessory infill kit for round aluminum balusters—Horizontal	XXRDHIK08	WT, BK, TH, VL, GP, FP, RS
	8' (2.43 m) Accessory infill kit for round aluminum balusters—Stair	XXRDSIK08	WT, BK, TH, VL, GP, FP, RS
	6' (1.83 m) Accessory infill kit for square aluminum balusters—Horizontal	Available early 2014	
	6' (1.83 m) Accessory infill kit for square aluminum balusters—Stair	Available early 2014	
	8' (2.43 m) Accessory infill kit for square aluminum balusters—Horizontal	Available early 2014	
	8' (2.43 m) Accessory infill kit for square aluminum balusters—Stair	Available early 2014	
	6' (1.83 m) Glass panel accessory kit *(Glass panel mounting hardware: **glass panel not included**)*	XXGLIK06	WT, BK, TH, VL, GP, FP, RS
Transcend Accessories • All accessories include a quantity of 12 per box unless otherwise noted.	Mounting hardware for cut rails—Horizontal	XXHZACCYKIT	WT, BK, TH, VL, GP, FP, RS
	Mounting hardware for cut rails—Stair	XXSTACCYKIT	WT, BK, TH, VL, GP, FP, RS
	Transcend RSB bracket pack—Horizontal (24/box)	TSHBRACKET	
	Transcend RSB bracket pack—Stair (24/box)	TSSBRACKET	
	0° Rail gasket pack—Horizontal	XX00HGASK	WT, BK, TH, VL, GP, FP, RS
	0° Rail gasket pack—Stair	XX00SGASK	WT, BK, TH, VL, GP, FP, RS
	22.5° Rail gasket pack—(for crown/universal/bevel)	XX22HGAS	WT, BK, TH, VL, GP, FP, RS
	45° Bird's mouth gasket pack (for 4 x 4 crown/universal)	XX45RSBADAP	WT, BK, TH, VL, GP, FP, RS
	45° Gasket pack (for 4 x 4 or 6 x 6 beveled)	XX45BEVGASK	WT, BK, TH, VL, GP, FP, RS
	45° Gasket pack (for 6 x 6 crown/universal)	WT45HGASK	WT
	Adjustable foot blocks (50/box)—White	RWFTBLK	WT
	Adjustable foot blocks (50/box)—Colored	XXFTBLK	BK, TH, VL, GP, FP, RS
Rail and Baluster Kit **Available in Classic White only.** • Crown top rail • Universal bottom rail • Square balusters • Baluster spacers • Adjustable foot block • Mounting hardware 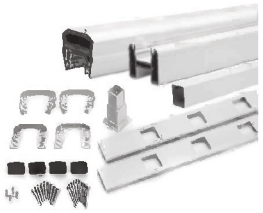	6' x 36" Rail and baluster kit—Horizontal	WT0636HRK	WT
	6' x 36" Rail and baluster kit—Stair	WT0636SRK	WT
	8' x 36" Rail and baluster kit—Horizontal	WT0836HRK	WT
	8' x 36" Rail and baluster kit—Stair	WT0836SRK	WT
	(6' Rail: 67.5" (1715 mm) actual length; 8' Rail: 91.5" (2324 mm) actual length)		

XX = INSERT COLOR PREFIX: **BK** Charcoal Black **BZ** Bronze (Aluminum Rail Only) **FP** Fire Pit **GP** Gravel Path **RS** Rope Swing **TH** Tree House **VL** Vintage Lantern **WT** Classic White

REVEAL® ALUMINUM RAILING SPECIFICATIONS AND PROFILES

RAILING SYSTEM	DESCRIPTION	ITEM NUMBER	COLORS
Aluminum Post with Cap and Skirt **Aluminum Crossover Post** **Aluminum posts can only be used with the Trex Reveal line.** **MUST USE TREX DECK MOUNT POST HARDWARE AND METAL PLATE WHEN ATTACHED TO REVEAL POSTS.** 	2" x 2" x 37" Post with cap and skirt—Horizontal *[2" x 2" x 37" (51 mm x 51 mm x 940 mm) actual dimensions]* 2" x 2" x 43" Post with cap and skirt—Horizontal *[2" x 2" x 43" (51 mm x 51 mm x 1092 mm) actual dimensions]* 2" x 2" x 53" Post with cap and skirt—Stair (cut-to-length) *[2" x 2" x 53" (51 mm x 51 mm x 1346 mm) actual dimensions]* 2" x 2" x 36" Crossover post—Horizontal (includes crossover bracket) *[2" x 2" x 36" (51 mm x 51 mm x 914 mm) actual dimensions]* 2" x 2" x 42" Crossover post—Horizontal (includes crossover bracket) *[2" x 2" x 42" (51 mm x 51 mm x 1092 mm) actual dimensions]* 2.5" x 2.5" x 37" Post with cap and skirt—Horizontal (IRC Compliant) *[2.5" x 2.5" x 37" (64 mm x 64 mm x 940 mm) actual dimensions]* 2.5" x 2.5" x 43" Post with cap and skirt—Horizontal (IRC Compliant) *[2.5" x 2.5" x 43" (64 mm x 64 mm x 1092 mm) actual dimensions]* 2.5" x 2.5" x 53" Post with cap and skirt—Stair (IRC Compliant) *[2.5" x 2.5" x 53" (64 mm x 64 mm x 1346 mm) actual dimensions]* Deck Mount Post Hardware	XXAL020237AP XXAL020243AP XXAL020253AP XXAL020236CP XXAL020242CP XXAL252537RCAP XXAL252543RCAP XXAL252553RCAP SSPOSTHWDECK	
Rail & Baluster Kit • Top rail • Bottom rail • Balusters • Mounting & support hardware 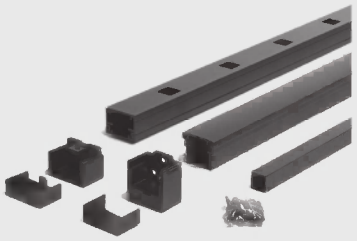	6' x 36" Rail kit with square balusters—Horizontal 6' x 36" Rail kit with square balusters—Stair 8' x 36" Rail kit with square balusters—Horizontal 8' x 36" Rail kit with square balusters—Stair 6' x 42" Rail kit with square balusters—Horizontal 6' x 42" Rail kit with square balusters—Stair 8' x 42" Rail kit with square balusters—Horizontal 8' x 42" Rail kit with square balusters—Stair 6' x 36" Rail kit with round balusters—Horizontal 6' x 36" Rail kit with round balusters—Stair 8' x 36" Rail kit with round balusters—Horizontal 8' x 36" Rail kit with round balusters—Stair 6' x 42" Rail kit with round balusters—Horizontal 6' x 42" Rail kit with round balusters—Stair 8' x 42" Rail kit with round balusters—Horizontal 8' x 42" Rail kit with round balusters—Stair Dimensions above are actuals. *See below for metrics.* [6' x 36": 72" x 36" (1829 mm x 914 mm) actual dimensions] [8' x 36": 96" x 36" (2438 mm x 914 mm) actual dimensions] [6' x 42": 72" x 42" (1829 mm x 1067 mm) actual dimensions] [8' x 42": 96" x 42" (2438 mm x 1067 mm) actual dimensions]	XXAS0636HRK XXAS0636SRK XXAS0836HRK XXAS0836SRK XXAS0642HRK XXAS0642SRK XXAS0842HRK XXAS0842SRK XXAR0636HRK XXAR0636SRK XXAR0836HRK XXAR0836SRK XXAR0642HRK XXAR0642SRK XXAR0842HRK XXAR0842SRK	
Reveal Accessories	Fixed bracket—Horizontal (4/pack) Fixed bracket—Stair (4/pack) Swivel bracket—Horizontal (2/pack–1 top, 1 bottom) Swivel bracket—Stair (2/pack–1 top, 1 bottom) Crossover bracket—Horizontal (1/pack) Swivel crossover bracket—Stair (1/pack) Compound swivel bracket (2/pack–1 top, 1 bottom) Aluminum foot block	XXFHBKTAL XXFSBKTAL XXSWHBKTAL XXSWSBKTAL XXFHCBKTAL XXSWSCBKTAL XXCPDSWBKTAL XXALFTBLK	

XX = INSERT COLOR PREFIX: **BK** Charcoal Black **BZ** Bronze **WT** Classic White

TREX SELECT® RAILING

RAILING SYSTEM	DESCRIPTION	ITEM NUMBER	COLORS
Rail and Baluster Kit ***NOTE: Available in Classic White ONLY*** • Top rail • Bottom rail • Square balusters • Adjustable foot block • Hardware pack 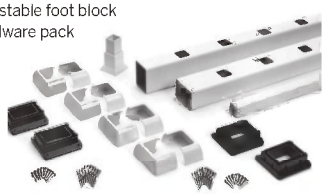	6' x 36" Rail and baluster kit—Horizontal 6' x 36" Rail and baluster kit—Stair 8' x 36" Rail and baluster kit—Horizontal 8' x 36" Rail and baluster kit—Stair *(6' Rail: 67.5" (1715 mm) actual length;* *8' Rail: 91.5" (2324 mm) actual length)*	WT0636HSELK WT0636SS ELK WT0836HSELK WT0836SS ELK	WT
Select Accessories	Mounting hardware for cut rails—Horizontal (10 kits/box) Mounting hardware for cut rails—Stair (10 kits/box) 45° Adapter kit (10 kits/box)	WTHSELCUT WTSSELCUT WTSEL45ADP	WT
Bulk Packs 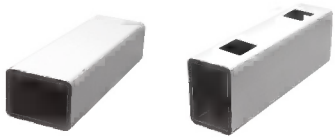	6' Top rail—Horizontal (10/box) 6' Top rail—Stair (10/box) 8' Top rail—Horizontal (10/box) 8' Top rail—Stair (10/box) 6' Bottom rail—Horizontal (10/box) 6' Bottom rail—Stair (10/box) 8' Bottom rail—Horizontal (10/box) 8' Bottom rail—Stair (10/box) [6' Rail: 67.5" (1715mm) actual length; 8' Rail: 91.5" (2324 mm) actual length]	WTSELHTR06 WTSELSTR06 WTSELHTR08 WTSELSTR08 WTSELHBR06 WTSELSBR06 WTSELHBR08 WTSELSBR08	WT WT WT WT WT WT WT WT
Select Railing System 	Square balusters for 36" rail height (16/pack) [1.125" x 1.125" x 32" (29 mm x 29 mm x 813 mm) actual dimensions] Square balusters for 42" rail height (16/pack) [1.125" x 1.125" x 38" (29 mm x 29 mm x 965 mm) actual dimensions]	WT121230SELBK WT121236SELBK	WT WT

XX = INSERT COLOR PREFIX: **WT** Classic White

TRADITIONAL RAILING SPECIFICATIONS AND PROFILES

PART	DESCRIPTION	ITEM NUMBER	COLORS
Posts	4" x 4" x 48" (10.2 cm x 10.2 cm x 121.9 cm) Post sleeve 4" x 4" x 108" (10.2 cm x 10.2 cm x 274.3 cm) Post sleeve	XX040448PS XX0404108PS	SD, WB, WG, MB
Post Sleeve Skirt 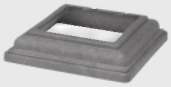	4" x 4" (10.2 cm x 10.2 cm) Post sleeve skirt	XXRPSSKIRT	SD, WB, WG, MB
Railings	Origins Uncapped 2" x 4" x 16' (5.1 cm x 5.1 cm x 4.9 m)	XX020416OS120	SD, WB, WG, MB
Balusters/Spindles 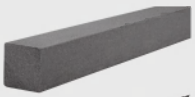	144" (365.8 cm) Bulk balusters 32" x 1" (81.3 cm x 2.5 cm) Architectural baluster kit (5/kit) 40" x 1" (101.6 cm x 2.5 cm) Architectural baluster (5/kit) 26" x 3/4" (66 cm x 1.9 cm) Contemporary baluster kit (10/kit) 32" x 3/4" (81.3 cm x 1.9 cm) Contemporary baluster kit (10/kit) 3/4" (1.9 cm) Contemporary baluster connector 3/4" (1.9 cm) Stair contemporary baluster connector	XX020212OS150 BK0132VBK BK0140VBK BK3Q26RBK BK3Q32RBK BK075HCON BK075SCON	SD, WB, WG, MB BK BK BK BK BK BK

XX = INSERT COLOR PREFIX: **BK** Charcoal Black **MB** Madeira **SD** Saddle **WB** Woodland Brown **WG** Winchester Grey

NOTE: *For Designer Railing installation, refer to www.trex.com for installation instructions.*

ADA RAILING SPECIFICATIONS AND PROFILES

DESCRIPTION	ITEM NUMBER	COLOR
1 **104" (264.2 cm) Straight rail** 1.5" (3.8) diameter (PVC with aluminum stiffener)	BKADARAIL	Black
2 **Wall Return with Cover Plate** (PVC with aluminum stiffener)	BKADA90WRK	Black
3 **Straight Wall Return** 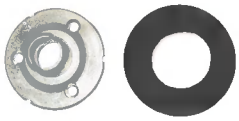	BKADASWRK	Black
4 **Handrail Bracket with Screws and Cap**	BKADARBK	Black
5 **90° Corner** (PVC)	BK90CORN	Black
6 **End Loop** (PVC with aluminum stiffener)	BKADALOOP	Black
7 **Post Return** ("Candy Cane") (PVC with aluminum stiffener)	BKADARET	Black
8 **Straight Joiner** (aluminum) ***NOTE:*** *Not visible.*	STRJOIN	

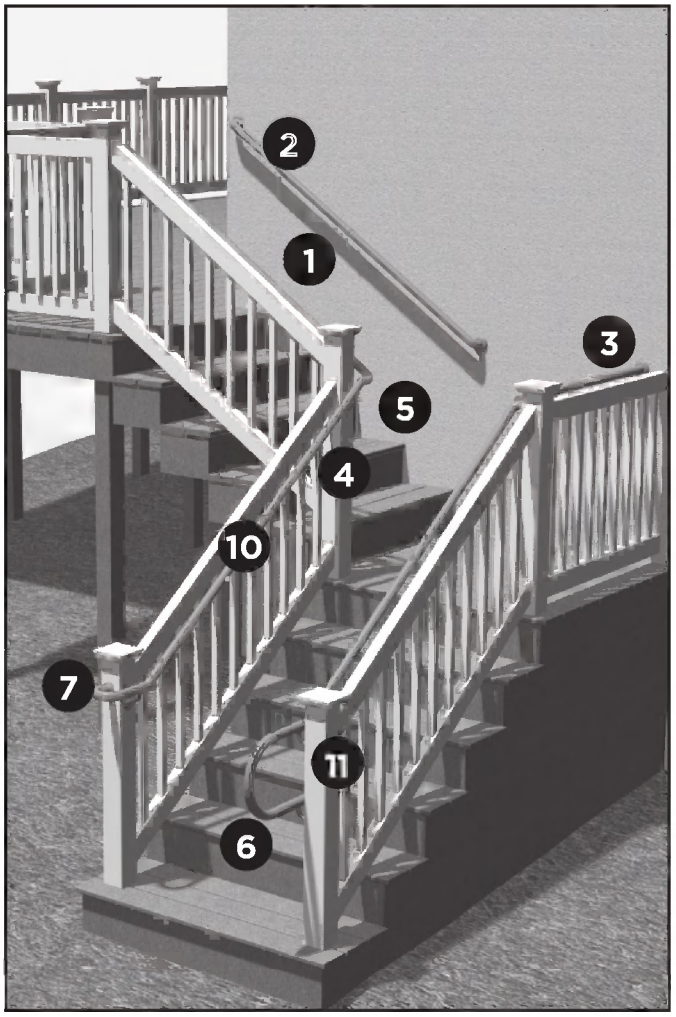

NOTE: *No. 8 straight joiner and No. 9 adjustable joiner are not visible.*

DESCRIPTION	ITEM NUMBER	COLOR
9 **Adjustable Joiner** (aluminum) ***NOTE:*** *Not visible.*	ADJOIN	
10 **Joint Ring** (plastic)	BKJOINRING	Black
11 **Rail End Cap** (plastic)	BKADACAP	Black

COLORS: **BK** Charcoal Black

TREX TRANSCEND® RAILING

NOTES:

» TREX TRANSCEND RAILINGS ARE DESIGNED TO BE INSTALLED OVER THE DECKING FRAME OR ON INSIDE OF RIM JOIST. NOTCHING OF PRESSURE-TREATED POSTS OR POSTS INSTALLED ON OUTSIDE OF RIM JOIST ARE NOT ALLOWED.

» All Trex Transcend Railing lengths are manufactured at ON CENTER dimensions (spanning from center of each post): 67-5/8" (176.8 cm) for 6' (1.83 m) on center, and 92-5/8" (235.3 cm) for 8' (2.44 m) on center. Note that railings are designed to be slightly longer that required to allow for very slight play in post placement – some minimal trimming may be required. IT IS VERY IMPORTANT TO MEASURE FIRST.

PARTS

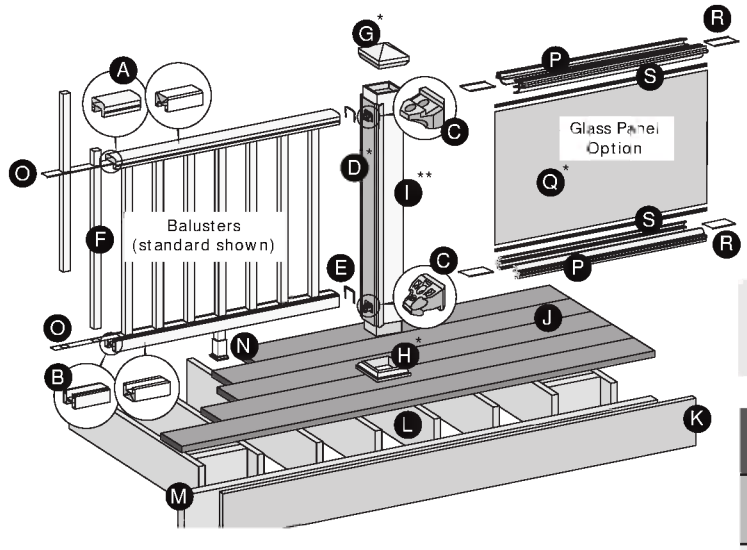

BALUSTER OPTIONS

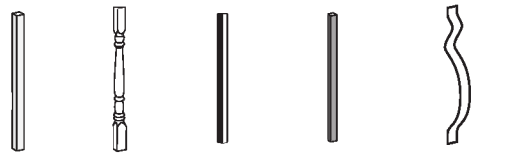

NOTE: *Pictorial representations shown may only show one style of railing, while others may also be used. Review detailed instructions to determine what railing styles and combinations can be used.*

A. Crown, universal, or beveled rail
B. Universal or beveled rail
C. Trex railing support bracket (RSB)
D. TrexExpress™ Railing Assembly Template*
E. Rail gaskets
F. Balusters
G. Post sleeve cap*
H. Post sleeve skirt*
I. Post sleeve - 4" x 4" (10.2 cm x 10.2 cm) or 6" x 6" (15.2 cm x 15.2 cm) post sleeve)**
J. Trex decking
K. TrexTrim™ or Trex fascia
L. Code-approved wood joist - 2" x 8" (5.1 cm x 20.3 cm)
M. Code-approved wood rim joist - 2" x 8" (5.1 cm x 20.3 cm) or larger
N. Adjustable foot block
O. Baluster spacer

Trex Transcend® Glass Panel Parts List

P. Panel support molding
Q. Tempered glass panel*
R. Trex panel support molding spacer
S. Weatherstripping

* *Item not included in the Transcend railing kits.*

** *Both 4" x 4" (10.2 cm x 10.2 cm) and 6" x 6" (15.2 cm x 15.2 cm) post sleeves are designed to fit over 4" x 4" pressure-treated post.*

DETERMINING BALUSTERS NEEDED

Baluster Type	Per 6' OC Section	Per 8' OC Section
Square and Colonial (Horizontal Application)	13	18
Square and Colonial (Stair Application)	11	15
Architectural (Horizontal Application)	14	19
Architectural (Stair Application)	11	15
Round/Square Aluminum (Horizontal Application)	15	20
Round/Square Aluminum (Stair Application)	12	16

NOTES: *Basic installation for balusters is the same for all options. When using architectural or round or square aluminum balusters, use correct baluster spacers.*

» If using the Architectural baluster with Transcend railing, and rattling of the balusters is a problem, use of a sticky back weather stripping, small foam pipe sleeve, or weather resistant caulking will help eliminate this. All these methods can be done after the railing has been installed if this is determined to be a problem. Unattach the baluster spacer, and use of the above recommendations (if using caulk, make sure to not get any on outside of railing—wipe away excess) and then snap baluster spacer back into place.

NOTE: *If installing 42" (106.7 cm) railing, use longer posts sleeves and measure accordingly to ensure a proper cut.* ***DO NOT CUT TO ACTUAL 42" LENGTH WITHOUT CONFIRMING WHAT STYLE OF RAILING YOU ARE INSTALLING.***

TREX TRANSCEND®
DECK RAILING

Standard Crown or Beveled

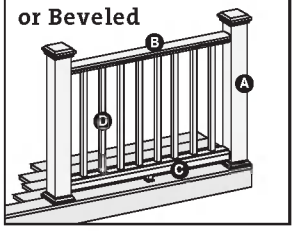

Cutting post sleeves is **NOT** required.
A. Pressure-treated post or Trex post mounts with Trex Transcend post sleeve
B. Crown or beveled rail
C. Universal bottom or beveled rail
D. Trex balusters
See page 61 for "How to Install Standard Railing".

Classic

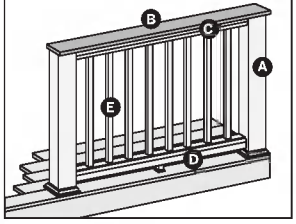

Post sleeves **WILL NEED TO BE CUT**.

POST SLEEVES WILL NEED TO BE CUT

A. Pressure-treated post with Trex Transcend post sleeve
   NOTE: » *Only for use with 4" x 4" (10.2 cm x 10.2 cm) post sleeve.*
   » *Trex Post Mounts (for decking or concrete) cannot be used with Transcend® classic design.*
B. Deck board top rail. ***NOTE:*** *5" (12.7 cm) Contours and Escapes cannot be used.*
C. Universal top rail
D. Universal bottom or Beveled rail (**DO NOT** use beveled rail as top rail for this application)
E. Trex balusters
See page 63 for "How to Install Classic Railing".

Colonial

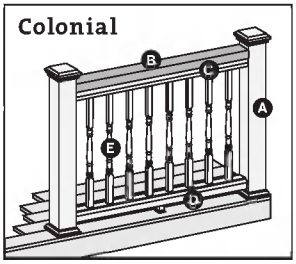

Cutting post sleeves is **NOT** required.
A. Pressure-treated post or Trex post mounts with Trex Transcend post sleeve
B. 2" x 4" (5.1 cm x 10.2 cm) lateral top rail
C. Universal top rail
D. Universal bottom or beveled rail (**DO NOT** use beveled rail as top rail for this application)
E. Trex balusters
See page 64 for "How to Install Colonial Railing".

Round Aluminum

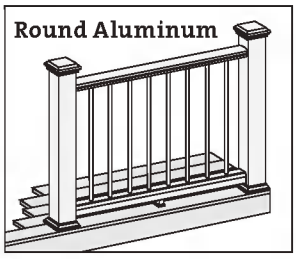

Square Aluminum

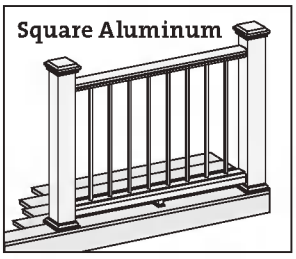

Architectural

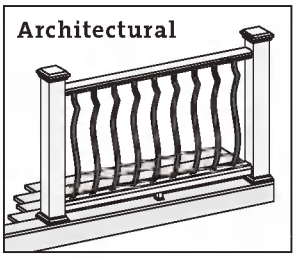

» Follow desired railing style instructions found above, substituting correct baluster spacer for type of baluster being used.
» *Refer to detailed instructions for added steps when using round and square aluminum balusters.*

Glass Panel – Crown or Beveled

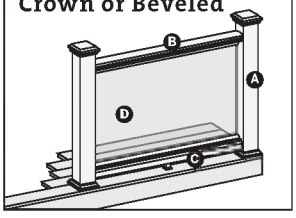

Cutting post sleeves is **NOT** required.
A. Pressure-treated post with Trex Transcend post sleeve. Trex Post Mounts (for decking or concrete) cannot be used with glass panels.
B. Crown rail or beveled rail (use universal rail if building Classic or Colonial design with glass inserts)
C. Universal bottom or beveled rail
D. Tempered glass panel (***NOT*** *included in kit)*
See page 67 for "How to Install Standard Style Glass Panel Railing". See page 68 for "How to Install Classic Style Glass Panel Railing". See page 70 for "How to Install Colonial Style Glass Panel Railing".
NOTE: *Glass panels are* ***NOT*** *recommended in stair applications.*

HOW TO INSTALL STANDARD CROWN OR BEVELED RAILING
TREX TRANSCEND®

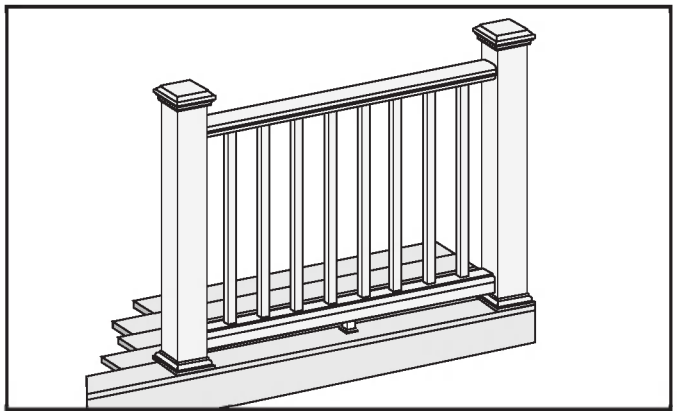

Read all instructions BEFORE installation.
Important: Post sleeves are **NOT** to be cut for this design style.

Installing Pressure-Treated Posts

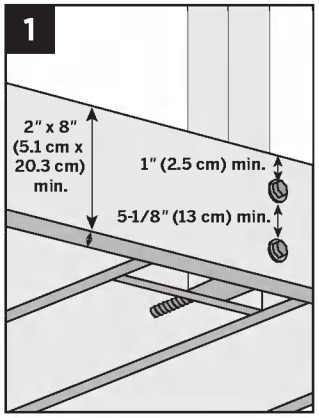

- » **Posts are to be installed 6' (1.83 m) or 8' (2.44 m) on center to accommodate appropriate railing length.**
- » Attach posts using 1/2" (1.3 cm) carriage bolts.
- » Minimum joist size is 2" x 8" (5.1 cm x 20.3 cm).
- » Top bolts must be 1" (2.5 cm) from tops of joists.
- » Bottom bolts must be 5-1/8" (13 cm) from top bolts.

NOTE: *Blocking can be added for extra strength.*

Installing Post Sleeve Skirts and Post Sleeves

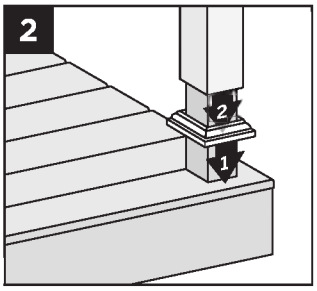

2. Slide post sleeve skirt over post and down to rest on decking surface. Slide post sleeve over post and position inside post sleeve skirt.

NOTE: *Shims can be used to plumb post sleeves.*

Installing Railing Support Brackets (RSBs)

Option 1: Without TrexExpress™ railing template

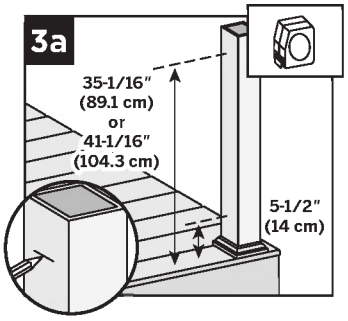

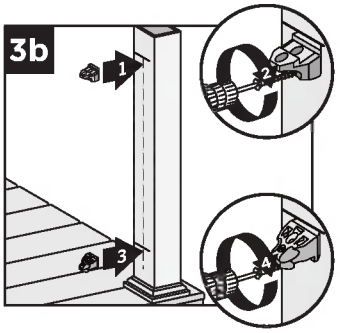

3a. Mark 5-1/2" (14 cm) and 35-1/16" (89.1 cm) from deck surface **OR** for 42" (106.7 cm) height, mark 5-1/2" (14 cm) and 41-1/16" (104.3 cm) from the deck surface.

3b. Place RSBs directly under marks, center on posts, and secure with 2" (5.1 cm) wood screws (provided with post sleeve). **Place top RSBs flat side UP, bottom RSBs flat side DOWN.**

Option 2: With TrexExpress™ railing template

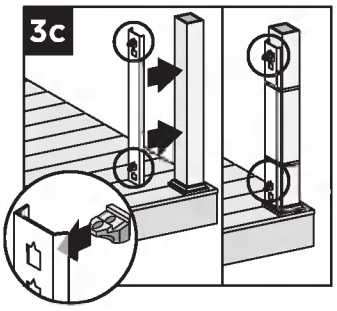

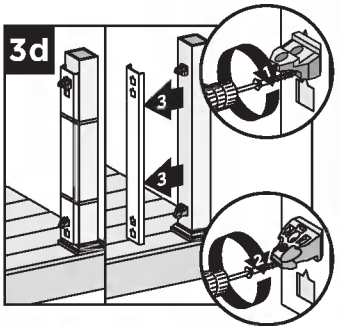

3c. Place RSBs in template. **Place top RSBs flat side UP, bottom RSBs flat side DOWN.** Secure template on post with tape or rubber band, with bottom of template resting on post skirt.

3d. Secure RSBs with 2" (5.1 cm) wood screws (provided in railing kit) and remove template.

NOTE: *Special steps are necessary when using 6" x 6" (15.2 cm x 15.2 cm) plastic TrexExpress™ template.*

- » *Cut off 1/2" (1.3 cm) from the bottom (blue arrows up) of the tool **BEFORE** first use.*
- » *Position top RSBs **ONLY**, 6"(15.2 cm) higher for 42" (106.7 cm) rail height.*
- » *Secure RSBs with 2-1/2" (6.4 cm) wood screws (provided with post sleeve) and remove template.*

Cutting Railings

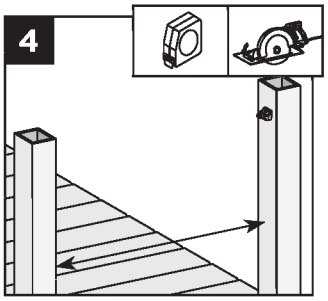

4. Measure between posts and cut rails to same length.

NOTES:

» If using optional rail gaskets, subtract 1/16" (0.15 cm) from each end.
» Attach baluster spacers to railing before cutting to allow for cleaner cut and less work.
» When measuring, cut equal lengths from each side of railing and baluster spacer to ensure equal spacing of balusters per each railing section.
» In some cases, the gasket can be attached before tightening railing to RSB.
» **If gaskets are tight, use a small flat head screwdriver to compress the tabs of the gasket if they are stuck outside the rail.**

Attaching Bottom Rail (Universal or Beveled Rail) and Foot Block

NOTES:

» ***REFER TO PAGE 78 FOR INSTRUCTIONS FOR INSTALLING FOOT BLOCKS ON UNIVERSAL RAILS.***
» ***IF INSTALLING BEVELED RAILING REFER TO PAGE 18 PRIOR TO INSTALLING FOOT BLOCK AS FOOT BLOCK MAY HAVE TO BE TRIMMED.***
» ***FOOT BLOCKS COME WITH SPECIFIC INSTRUCTIONS ON HOW TO ATTACH THESE TO DESIGNATED RAILINGS—ALSO REFER TO THESE INSTRUCTIONS AS WELL.***

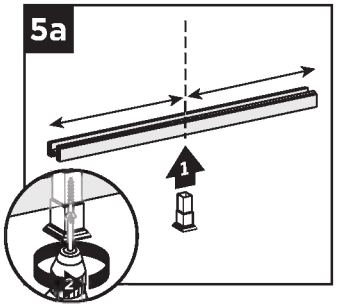

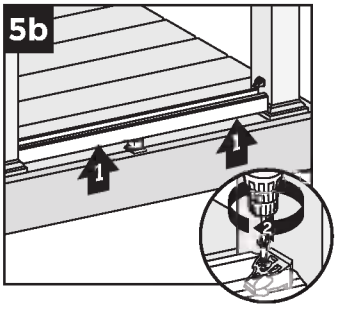

5a. Center foot block in universal rail channel or on beveled bottom rail and attach. **DO NOT** extend foot block.
5b. Lift bottom rail so RSBs are in the channel and attach with self-tapping screws *(provided)*.

5c. Telescope foot block down and screw through opposite sides. Place screw plugs.

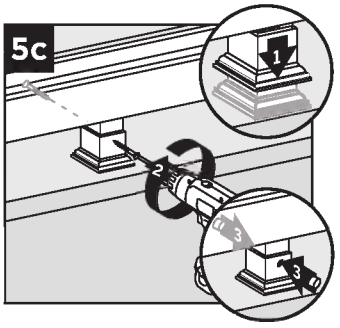

Placing Baluster Spacers and Balusters

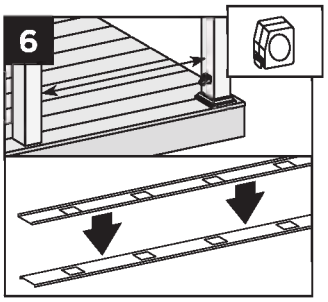

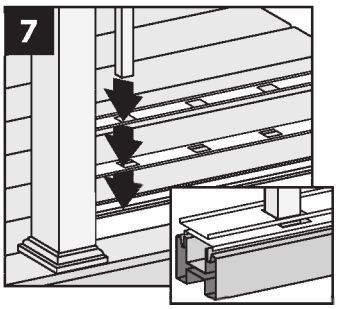

6. Cut baluster spacers the same length as rails, equally spaced so the holes line up.
7. Snap baluster spacer into bottom rail. Place inverted baluster spacer on top of first baluster spacer. Place balusters in baluster spacer holes.

HOW TO INSTALL STANDARD CROWN OR BEVELED RAILING/CONTINUED
TREX TRANSCEND®

Attaching Top Rail – Crown or Beveled Rail

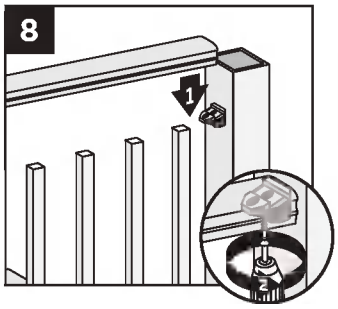

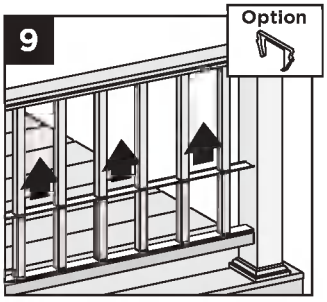

8. Place crown or beveled rail on RSBs with balusters in rail channels. Attach top rail to RSB with two self-tapping screws *(provided)*.
9. Slide baluster spacer up and snap into top rail. Place optional top rail gaskets on each end of rail.

Attaching Post Caps

10. Secure post caps with silicone or PVC adhesive.

NOTE: *Clean-up any excess adhesive before drying.*

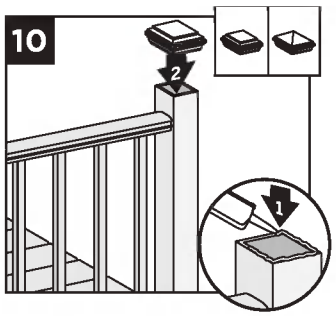

HOW TO INSTALL CLASSIC RAILING
TREX TRANSCEND®

NOTE: *Beveled rail cannot be used as top rail in this application.*

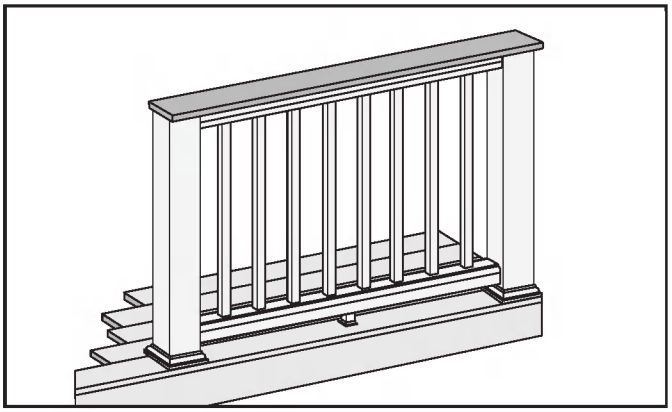

Important: ONLY use with 4" x 4" (10.2 cm x 10.2 cm) post and post sleeve. Cutting post and post sleeve **ONLY** apply to the Classic style railing.

1. **Installing Pressure-Treated Posts**
   See instructions on page 61.

Cutting Post and Post Sleeve

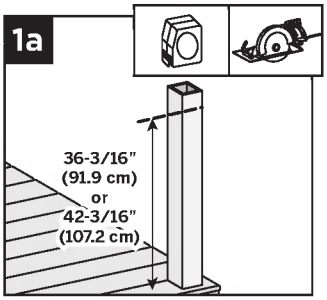

1a. Mark and cut post and post sleeve measuring from deck surface:
   » 36-3/16" (91.9 cm) for 36" (91.4 cm) height.
   » 42-3/16" (107.2 cm) for 42" (106.7 cm) height.

2. **Installing Post Sleeve Skirts and Post Sleeves** *See instructions on page 61.*

3. **Installing Railing Support Brackets (RSBs)**
   See instructions on page 61.

4. **Cutting Railings**
   See instructions on page 62.

5. **Attaching Bottom Rail (Universal or Beveled Rail) and Foot Block**
   See instructions on page 62.

6-7. **Placing Baluster Spacers and Balusters**
   See instructions on page 62.

HOW TO INSTALL CLASSIC RAILING/CONTINUED
TREX TRANSCEND®

Attaching the Inverted Universal Rail as Top Rail

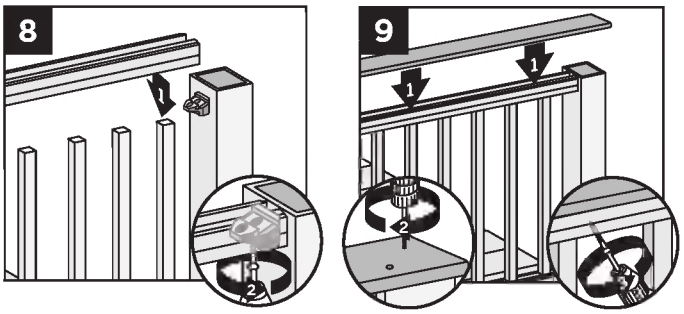

8. Place inverted universal rail onto RSBs with balusters in channel. Attach universal rail to RSBs with two self-tapping screws *(provided)*.
9. Place deck boards *(**DO NOT** use Escapes, Select, or Contour deck boards for top rail)* over universal rails. Attach boards on each post with Trex-recommended composite screws *(see page 35)* at a diagonal. Secure boards to universal rails with 2" (5.1 cm) pan-head screws *(not provided)* at an angle every 16" (40.6 cm) on center.

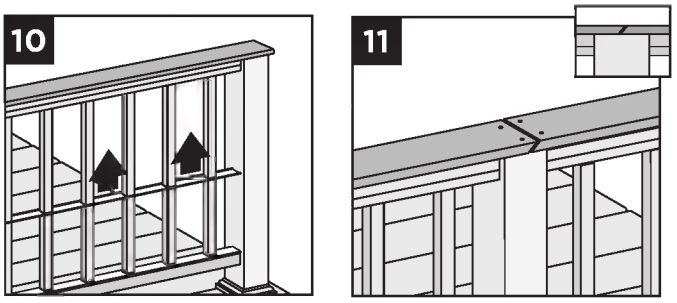

10. Slide baluster spacers up and snap into universal rails.

NOTE: *If necessary, cut tips off rail gaskets prior to installation.*

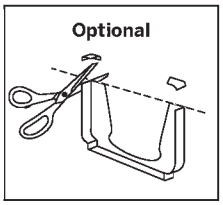

11. Use scarf cut for posts where two deck boards meet.

NOTE: *If installing in weather below 40°F (4.5°C), leave 1/8" (0.3 cm) gap between deck boards.*

HOW TO INSTALL COLONIAL RAILING
TREX TRANSCEND®

NOTE: *Beveled rail cannot be used as top rail in this application.*

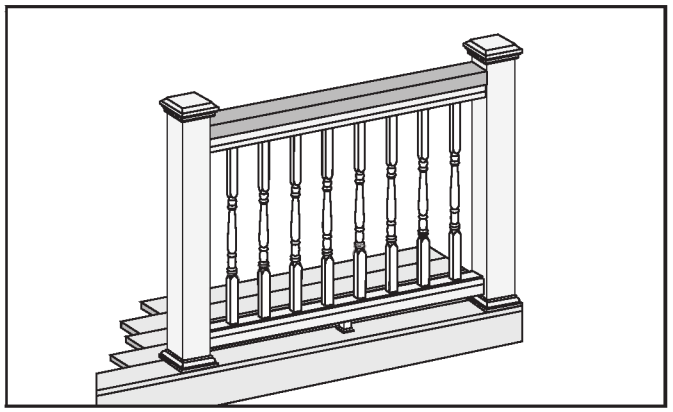

1. **Installing Pressure-Treated Posts**
   See instructions on page 61.
2. **Installing Post Sleeve Skirts and Post Sleeves** *See instructions on page 61.*
3. **Installing Railing Support Brackets (RSBs)**
   See instructions on page 61.
4. **Cutting Railings**
   See instructions on page 62.
5. **Attaching Bottom Rail (Universal or Beveled Rail) and Foot Block**
   See instructions on page 62.

6-7. **Placing Baluster Spacers and Balusters**
See instructions on page 62.

HOW TO INSTALL COLONIAL RAILING/CONTINUED
TREX TRANSCEND®

Attaching Inverted Universal Rail as Top Rail

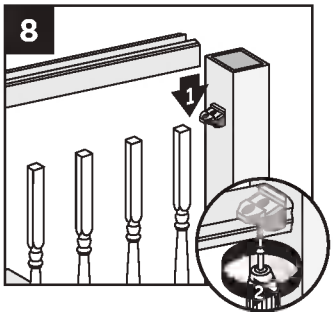

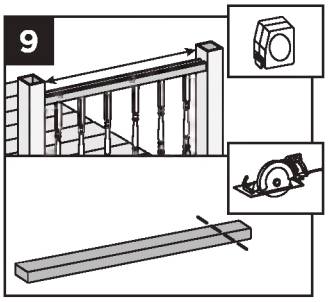

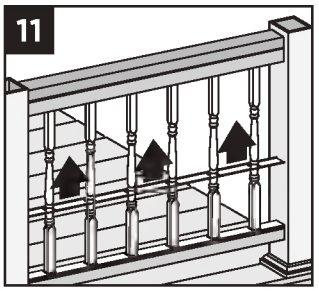

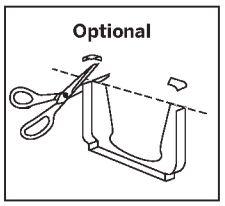

8. Place inverted universal rail onto RSBs with balusters in channel. Attach universal rail with two self-tapping screws *(provided)*.
9. Measure between posts and cut 2″ x 4″ (5.1 cm x 10.2 cm) to length.
10. Place 2″ x 4″ (5.1 cm x 10.2 cm) on universal rail. Attach board to rail with 2″ (5.1 cm) pan-head screws *(not provided)* every 16″ (40.6 cm) on center.

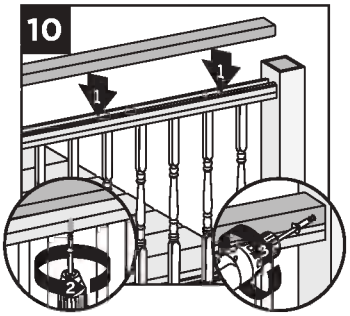

Pre-drill a pilot hole and toenail 2-1/2" (6.4 cm) screw at each end of 2″ x 4″ (5.1 cm x 10.2 cm) into post on back side of rail (side not facing decking).

11. Slide baluster spacer up and snap into universal rail.

NOTE: *If necessary, cut tips off rail gaskets prior to installation.*

Attaching Post Caps

12. Secure post cap with silicone or PVC adhesive.

NOTE: *Clean-up any excess adhesive before drying.*

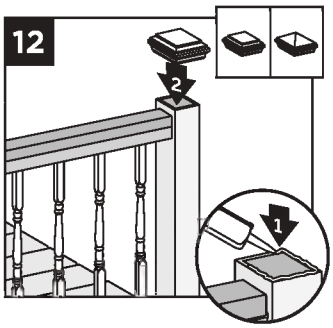

HOW TO INSTALL ROUND OR SQUARE ALUMINUM BALUSTERS
TREX TRANSCEND®

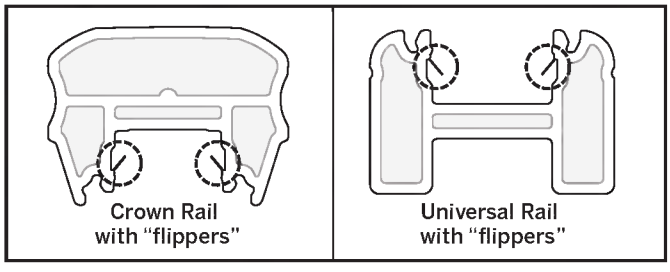

NOTE: *Older style crown and universal rails have "flippers" on the inside of the channels. Using* ***EXTREME CAUTION****, remove/cut these flippers on each side to allow for the fit of the aluminum baluster adaptor strip. All beveled style railings* ***DO NOT*** *have flippers.*

1. **Installing Pressure-Treated Posts**
   See instructions on page 61.
2. **Installing Post Sleeve Skirts and Post Sleeves**
   See instructions on page 61.
3. **Installing Railing Support Brackets (RSBs)**
   See instructions on page 61.
4. **Cutting Railings**
   See instructions on page 62.
5. **Attaching Bottom Rail (Universal or Beveled Rail) and Foot Block**
   See instructions on page 62.

Installing Aluminum Baluster Adaptor Strip and Baluster Spacers

6. After bottom rail is fully installed, place aluminum baluster adaptor strip into channel of bottom rail, ensuring that it's fully seated into the channel. When rail lengths are non-standard, the baluster adaptor strip will need to be cut 2-1/2" (6.4 cm) shorter than the rail to allow clearance for the RSB's on each end.

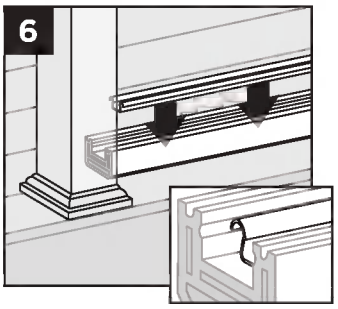

7. Snap baluster spacer into bottom rail. Place inverted baluster spacer on top of first baluster spacer.

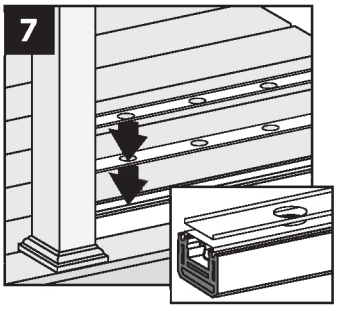

Attaching Top Rail, Aluminum Baluster Adaptor Strip, and Balusters and Bottom Baluster Spacer

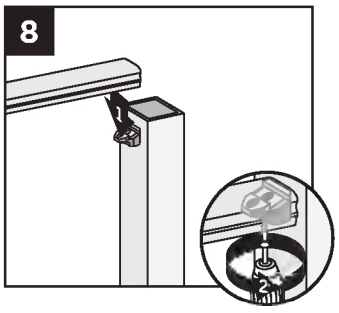

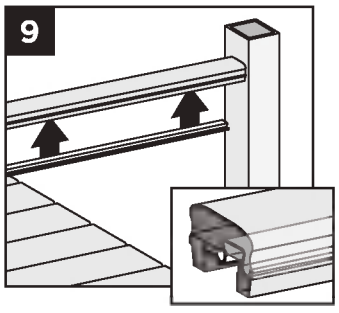

8. Place crown or beveled rail on RSBs with balusters in rail channels. Attach top rail to RSB with two self-tapping screws *(provided)*.
9. After top rail is fully installed, place aluminum baluster adaptor strip into channel of top rail, ensuring that it's fully seated into the channel.
10. Working at slight angle, press baluster through both baluster spacers and into bottom aluminum baluster adaptor strip, ensuring balusters are tight. Once balusters are seated into aluminum baluster adaptor strip of bottom rail, maneuver baluster into upper rail aluminum baluster adaptor strip. Some force will be needed to press balusters into place and level these.

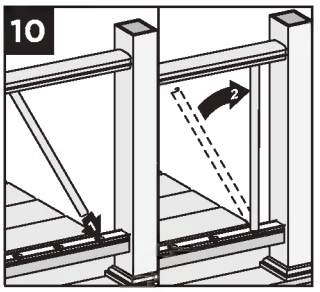

Tip: Ensure balusters are level prior to attempting to slide baluster spacer up. This will allow for the baluster spacer to move up freely and snap into upper rail. Use of a rubber mallet to gently tap balusters in level is recommended.

11. Slide baluster spacer up and snap into top rail. Place optional top rail gaskets on each end of rail.

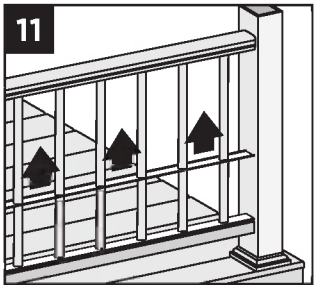

HOW TO INSTALL STANDARD GLASS PANEL - CROWN OR BEVELED RAILING

TREX TRANSCEND®

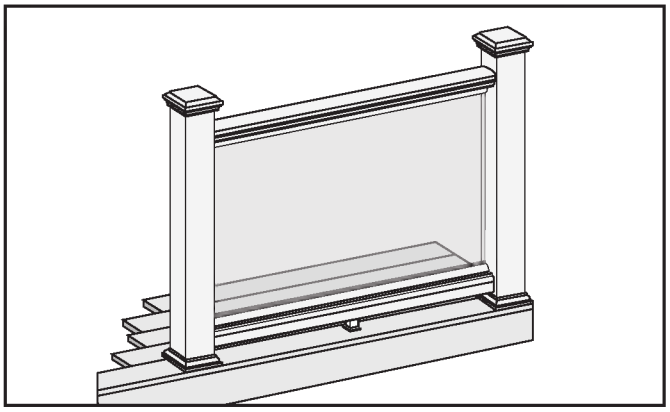

NOTES: Read all instructions BEFORE installation.

» You must purchase the 1/4" (0.6 cm) tempered glass panels. *See dimensions below.*

» Glass panels **ONLY** for use with maximum 6' (1.83 m) on center post spacing.

» ***NOT** recommended for stair applications.*

TEMPERED GLASS PANEL DIMENSIONS

» **36" (91.4 cm) high rail:**
1/4" x 30" x 63-1/2" max.
(0.6 cm x 76.2 cm x 161.3 cm)

» **42" (106.7 cm) high rail:**
1/4" x 36" x 63-1/2" max.
(0.6 cm x 91.4 cm x 161.3 cm)

1. **Installing Pressure-Treated Posts**
See instructions on page 61.

2. **Installing Post Sleeve Skirts and Post Sleeves** *See instructions on page 61.*

3. **Installing Railing Support Brackets (RSBs)**
See instructions on page 61.

4. **Cutting Railings**
See instructions on page 62.

5. **Attaching Bottom Rail (Universal or Beveled rail) and Foot Block**
See instructions on page 62.

Attach Weatherstripping and Positioning Panel

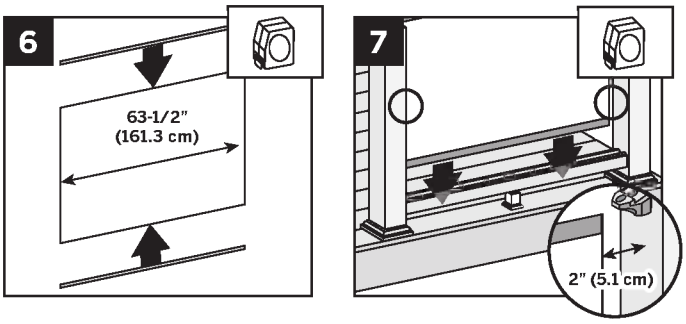

6. Push black-edged trim onto upper and lower edges of panel. Be sure trim runs entire length of glass. Extra trim can be cut with razor blade or scissors.
7. Position panel with weatherstripping into lower rail channel. Center panel between posts with about 2" (5.1 cm) of air space on each side of panel.

Attaching Top (Crown or Beveled) Rail and Panel Support Molding

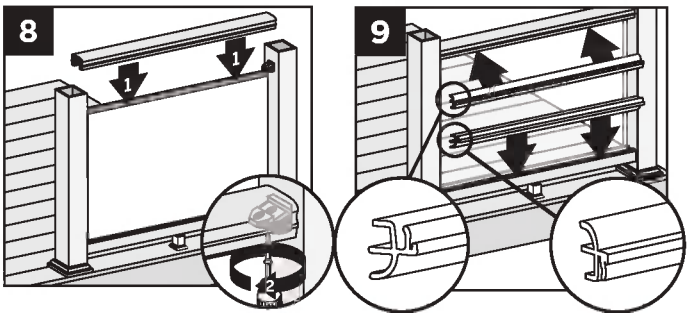

8. Place top rail over RSB brackets and glass panel. Secure rail to RSBs with 1-1/2" (3.8 cm) self-drilling screws *(provided)*.

***NOTE:** Avoid hitting glass panel while using the drill.*

9. Push PSM into rail to complete snap connection. Lower rail PSM edge rests on top of rail. Top rail PSM snaps flush into rail. If using beveled rails, the PSM will rest on the edges on the rail.

HOW TO INSTALL STANDARD GLASS PANEL - CROWN OR BEVELED RAILING/CONTINUED
TREX TRANSCEND®

Hiding Brackets

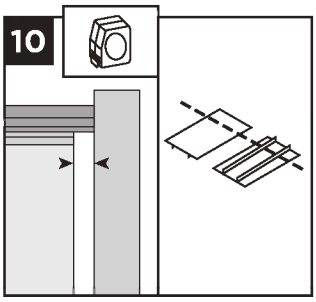

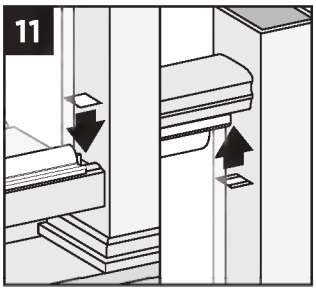

10. Cut Transcend baluster spacer into four lengths equal to distance between the glass panel and posts. Cut slowly and one at a time, to avoid chipping.
11. Snap spacer into bottom and top rail to hide brackets and create a seamless look.

Attaching Post Caps

12. Secure post caps with silicone or PVC adhesive.

NOTE: *Clean-up any excess adhesive before drying.*

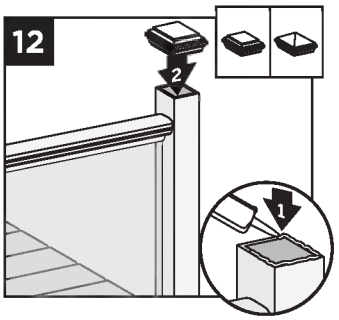

HOW TO INSTALL CLASSIC STYLE GLASS PANEL RAILING
TREX TRANSCEND®

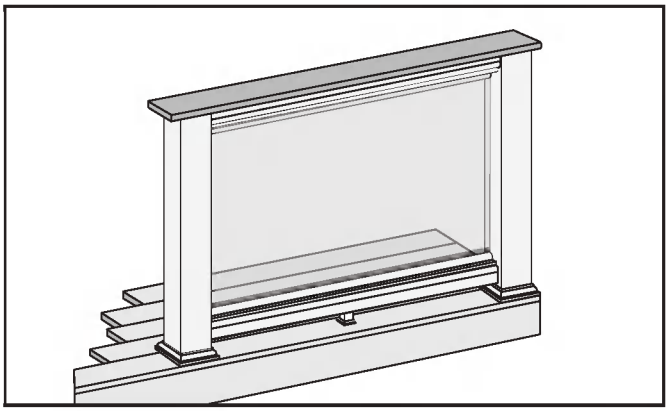

NOTES: Read all instructions BEFORE installation.

» You must purchase the 1/4" (0.6 cm) tempered glass panels. *See dimensions below.*
» Glass panels **ONLY** for use with maximum 6' (1.83 m) on center post spacing.
» ***NOT*** *recommended for stair applications.*

TEMPERED GLASS PANEL DIMENSIONS

» **36" (91.4 cm) high rail:**
1/4" x 30" x 63-1/2" max.
(0.6 cm x 76.2 cm x 161.3 cm)

» **42" (106.7 cm) high rail:**
1/4" x 36" x 63-1/2" max.
(0.6 cm x 91.4 cm x 161.3 cm)

1. **Installing Pressure-Treated Posts**
See instructions on page 61.

NOTE: *If installing glass with Classic Rail design, rail posts and post sleeves must be cut.*

Cutting Post and Post Sleeve

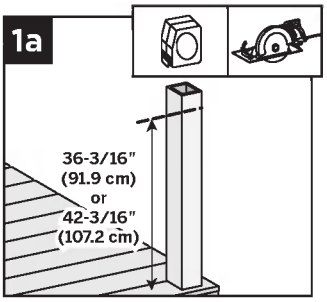

1a. Mark and cut post and post sleeve measuring from deck surface:
- » 36-3/16" (91.9 cm) for 36" (91.4 cm) height.
- » 42-3/16" (107.2 cm) for 42" (106.7 cm) height.

2. **Installing Post Sleeve Skirts and Post Sleeves**
See instructions on page 61.

3. **Installing Railing Support Brackets (RSBs)**
See instructions on page 61.

4. **Cutting Railings**
See instructions on page 62.

5. **Attaching Bottom Rail (Universal or Beveled rail) and Foot Block**
See instructions on page 62.

Attach Weatherstripping and Positioning Panel

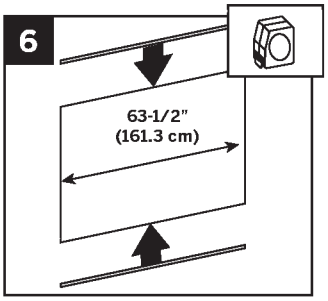

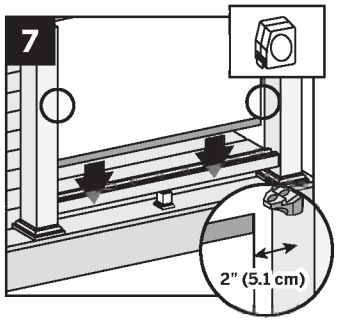

6. Push black-edged trim onto upper and lower edges of panel. Be sure trim runs entire length of glass. Extra trim can be cut with razor blade or scissors.
7. Position panel with weatherstripping into lower rail channel. Center panel between posts with about 2" (5.1 cm) of air space on each side of panel.

Attaching Top Rail and Panel Support Molding

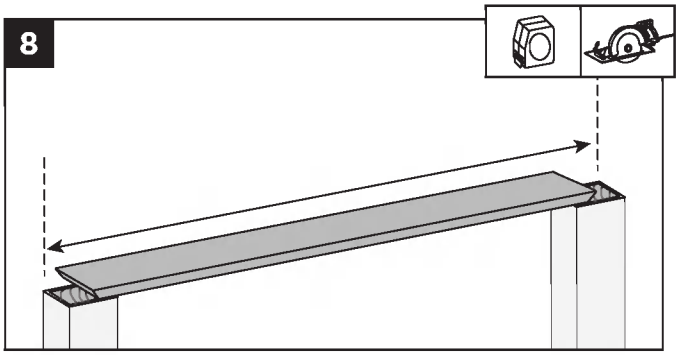

8. Cut deck boards to appropriate length of railing span, remembering to include extra space on each side of the deck board to allow for attachment to the post. Decking boards must cover 1/2 of the pressure-treated post to allow this to be fastened later. If you include extra decking material on each side this can be cut off later if need be.

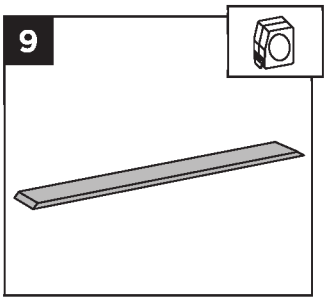

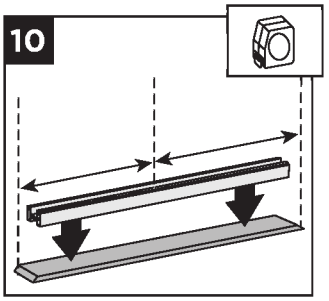

9. Place inverted deck board (place top side of deck board down) on clean, flat surface. (**DO NOT** use Escapes, Select, or Contour deck boards for top rail.)
10. Place universal rail (remembering to orient this properly so that when flipped over, the universal rail will accept the baluster spacer and balusters), on the deck board, centered in both directions to allow for final attachment to post.

HOW TO INSTALL CLASSIC STYLE GLASS PANEL RAILING/CONTINUED
TREX TRANSCEND®

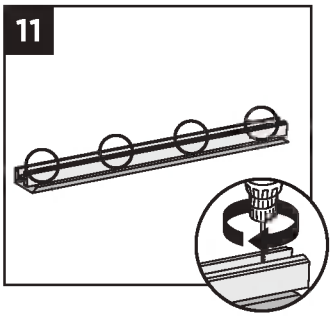

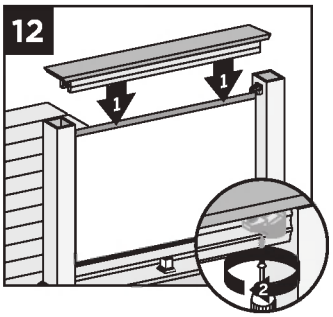

11. Secure deck board to universal rail with 2″ (5.1 cm) pan head screws (not provided) approximately every 16″ (40.6 cm) on center. (**DO NOT** overtighten.)
12. Place inverted universal rail with deck board attached onto RSB's with glass panel in the channel. Attach universal rail to RSB's with two self-tapping screws *(provided)*.
13. Attach deck board to post (ensure that screws are attached to wood post) with Trex recommended composite screws at a diagonal.

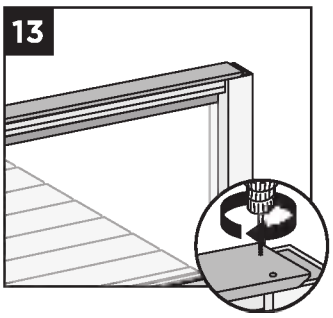

14. Install four panel support moldings (PSM) into rails to complete snap connection. Both the top and bottom PSM edges rest on the lip of the rails for both universal and beveled rails.

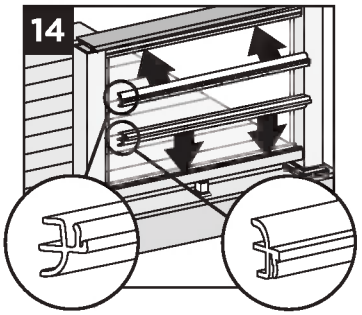

Hiding Brackets

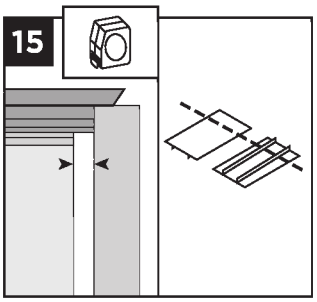

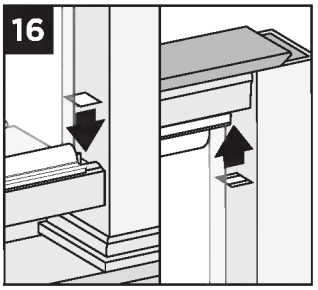

15. Cut Transcend baluster spacer into four lengths equal to distance between the glass panel and posts. Cut slowly and one at a time, to avoid chipping.
16. Snap spacer into bottom and top rail to hide brackets and create a seamless look.

HOW TO INSTALL COLONIAL STYLE GLASS PANEL RAILING
TREX TRANSCEND®

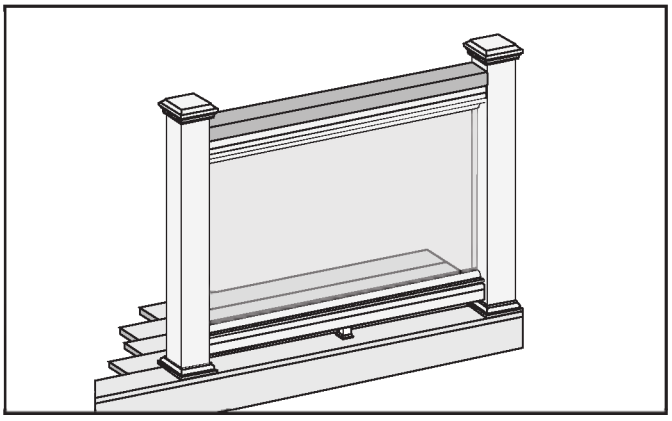

NOTES: Read all instructions BEFORE installation.

» You must purchase the 1/4″ (0.6 cm) tempered glass panels. *See dimensions below.*
» Glass panels **ONLY** for use with maximum 6′ (1.83 m) on center post spacing.
» ***NOT** recommended for stair applications.*

TEMPERED GLASS PANEL DIMENSIONS

» **36″ (91.4 cm) high rail:**
1/4″ x 30″ x 63-1/2″ max.
(0.6 cm x 76.2 cm x 161.3 cm)

» **42″ (106.7 cm) high rail:**
1/4″ x 36″ x 63-1/2″ max.
(0.6 cm x 91.4 cm x 161.3 cm)

HOW TO INSTALL COLONIAL STYLE GLASS PANEL RAILING/CONTINUED
TREX TRANSCEND®

1. **Installing Pressure-Treated Posts**
   See instructions on page 61.

2. **Installing Post Sleeve Skirts and Post Sleeves**
   See instructions on page 61.

3. **Installing Railing Support Brackets (RSBs)**
   See instructions on page 61.

4. **Cutting Railings**
   See instructions on page 62.

5. **Attaching Bottom Rail (Universal or Beveled rail) and Foot Block**
   See instructions on page 62.

Attach Weatherstripping and Positioning Panel

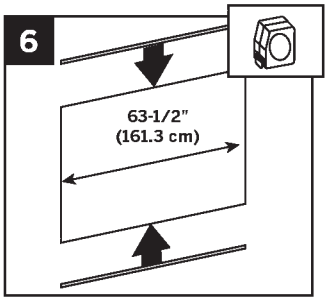

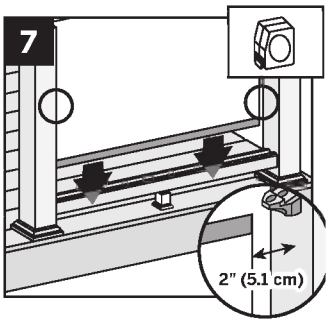

6. Push black-edged trim onto upper and lower edges of panel. Be sure trim runs entire length of glass. Extra trim can be cut with razor blade or scissors.
7. Position panel with weatherstripping into lower rail channel. Center panel between posts with about 2" (5.1 cm) of air space on each side of panel.

Attaching Top Rail and Panel Support Molding

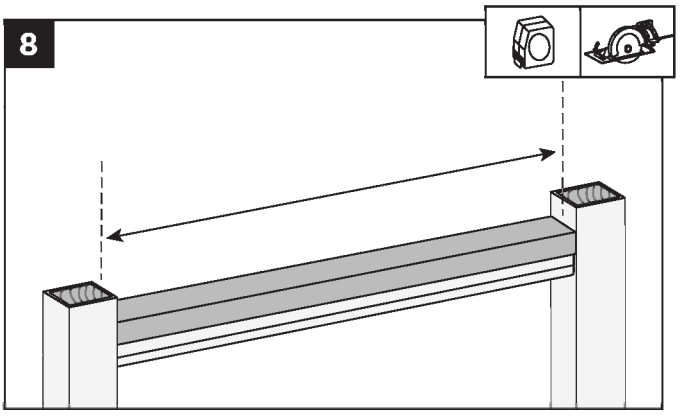

8. Cut 2" x 4" (5.1 cm x 10.2 cm) to same length of the inverted Universal rail.

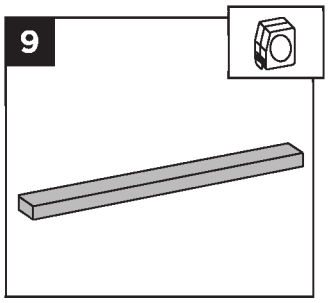

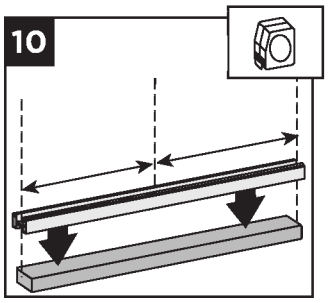

9. Place inverted 2" x 4" (5.1 cm x 10.2 cm) (place top side down) on clean, flat surface.
10. Place universal rail (remembering to orient this properly so that when flipped over, the universal rail will accept the baluster spacer and balusters), on the 2" x 4" (5.1 cm x 10.2 cm), centered.

HOW TO ATTACH COLONIAL STYLE GLASS PANEL RAILING/CONTINUED
TREX TRANSCEND®

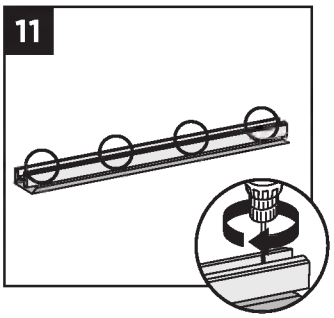

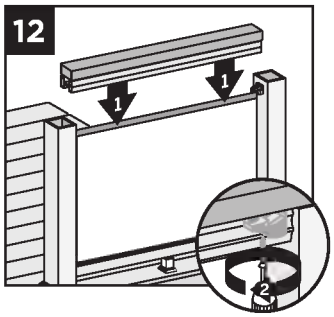

11. Secure 2" x 4" (5.1 cm x 10.2 cm) to universal rail with 2" (5.1 cm) pan head screws *(not provided)* approximately every 16" (40.6 cm) on center.
12. Place inverted universal rail with 2" x 4" (5.1 cm x 10.2 cm) attached onto RSB's with glass panel in the channel. Attach universal rail to RSB's with two self-tapping screws *(not provided)*.
13. Predrill a pilot hole and toenail 2-1/2" (6.4 cm) screw at each end of the 2" x 4" (5.1 cm x 10.2 cm) into post on back side (side not facing decking).

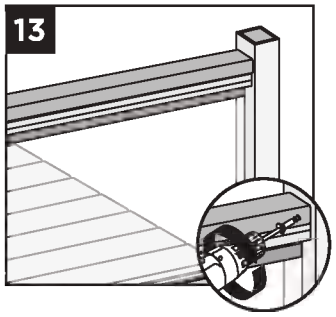

14. Install four panel support moldings (PSM) into rails to complete snap connection. Both the top and bottom PSM edges rest on the lip of the rails for both universal and beveled rails.

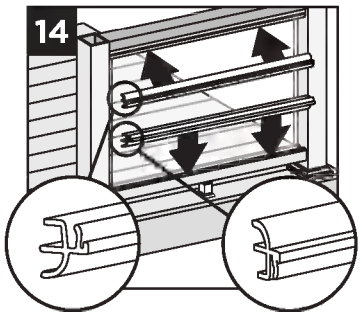

Hiding Brackets

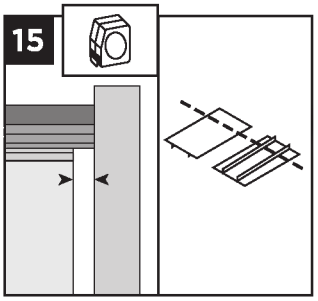

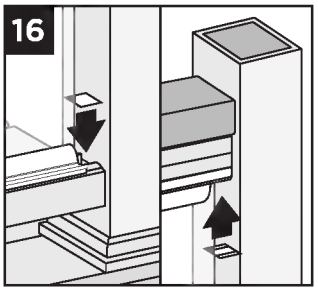

15. Cut Transcend baluster spacer into four lengths equal to distance between the glass panel and posts. Cut slowly and one at a time, to avoid chipping.
16. Snap spacer into bottom and top rail to hide brackets and create a seamless look.

Attaching Post Caps

17. Secure post caps with silicone or PVC adhesive.

NOTE: *Clean-up any excess adhesive before drying.*

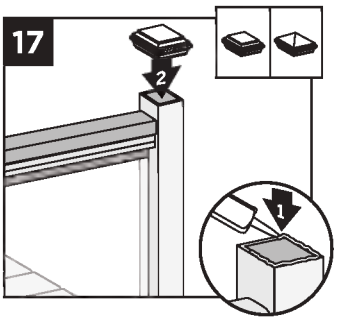

HOW TO INSTALL ON-AN-ANGLE RAILING
TREX TRANSCEND® (CROWN AND UNIVERSAL RAILING)

NOTE: *Trex Railing brackets are designed to be installed up to a 45° angle.*

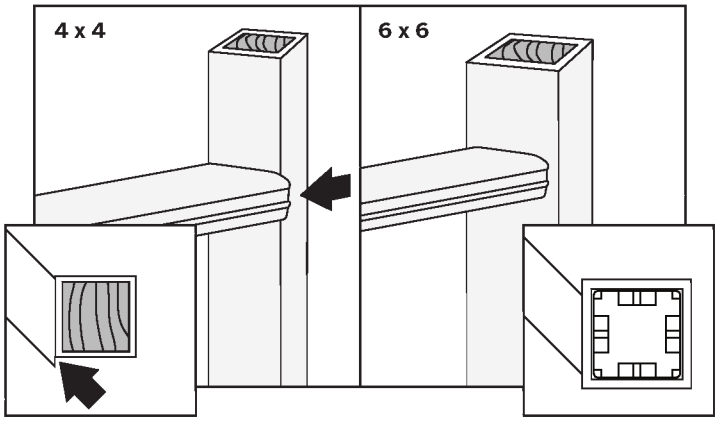

» **Small angles** (1° - 30°). Both 4" x 4" (10.2 cm x 10.2 cm) or 6" x 6" (15.2 cm x 15.2 cm) post sleeves work well.
» **Large angles** (31° - 45°). **USE ONLY** 6" x 6" (15.2 cm x 15.2 cm) post sleeves when installing on flat side.
» **45° angles** using 4" x 4" (10.2 cm x 10.2 cm) post sleeves **MUST** use Transcend bird's mouth brackets.

NOTE: *Railing will be installed on corner of posts.*

» Using 6" x 6" (15.2 cm x 15.2 cm) post sleeves at 45° angles. Brackets are installed off-center and use 45° Transcend gaskets.
» Railing gaskets are designed to fit at 0°, 22.5°, and 45° angles. Gaskets are labeled with appropriate angle dimension.

HOW TO INSTALL ON-AN-ANGLE RAILING
TREX TRANSCEND® (BEVELED RAILING)

NOTE: *Trex railing brackets are designed to be installed up to a 45° angle.*

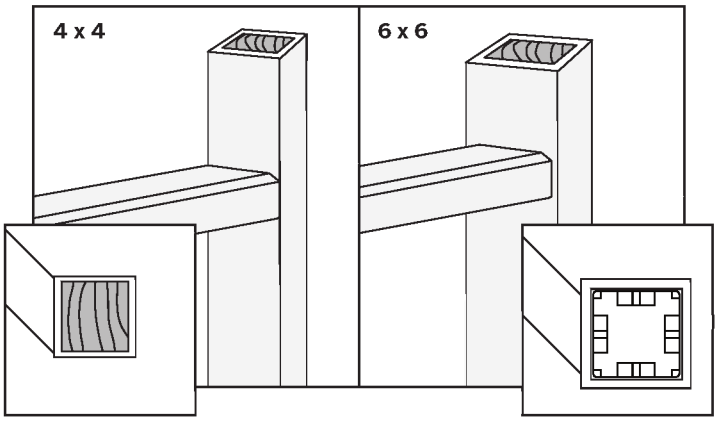

» **Angle Range** (1° - 45°). Both 4" x 4" (10.2 cm x 10.2 cm) or 6" x 6" (15.2 cm x 15.2 cm) post sleeves work well.
» If installing at 45° angles, using 4" x 4" (10.2 cm x 10.2 cm) or 6" x 6" (15.2 cm x 15.2 cm) post sleeves, install brackets slightly off-center to allow actual railing to be centered on the post sleeve.
» Horizontal railing gaskets are designed to fit at 0°, 22.5°, and 45° angles. Gaskets are labeled in order to ensure correct location.

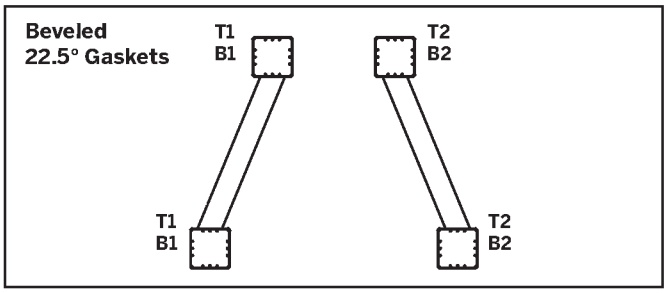

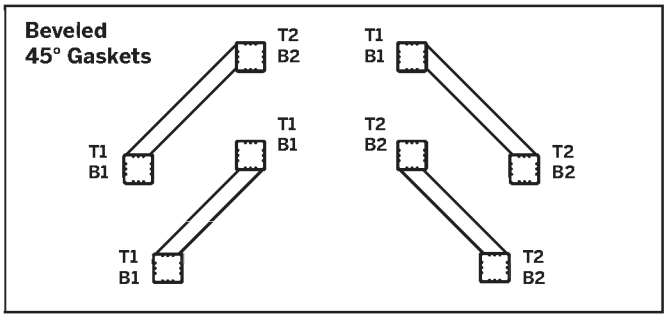

HOW TO INSTALL CROWN, UNIVERSAL AND BEVELED BIRD'S MOUTH RAILING

TREX TRANSCEND®

NOTES:

» *Use with 4" x 4" (10.2 cm x 10.2 cm) post sleeve **ONLY**.*

» *Gaskets are only designed for use with Transcend crown and universal railing (not beveled railing).*

Read all instructions BEFORE installation.

PARTS

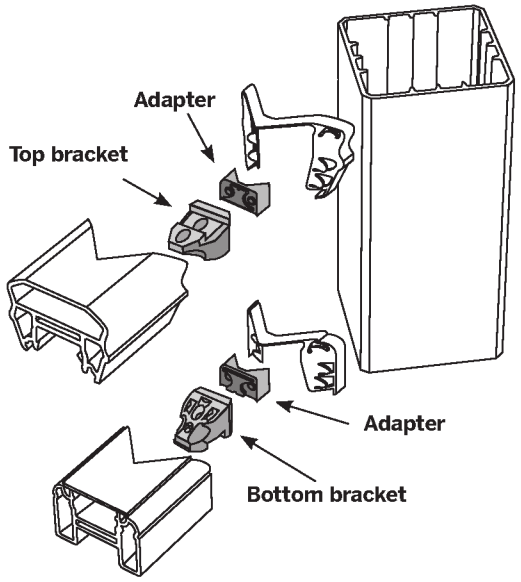

Mark Posts

1. Measure and mark 4" (10.2 cm) and 33-9/16" (85.2 cm) up from top of post skirt. For a 42" (106.7 cm) rail, top mark is 39-9/16" (100.5 cm) on post.

NOTE: *Without skirt, add 1-1/2" (3.8 cm) to measurements.*

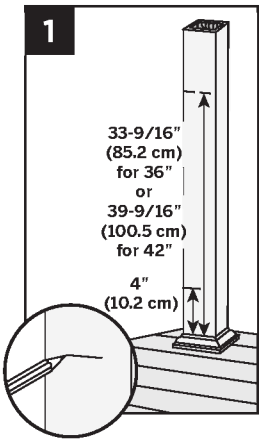

Attaching Adapters

Snap adapters into RSBs.

Pre-drill Bottom and Top RSBs

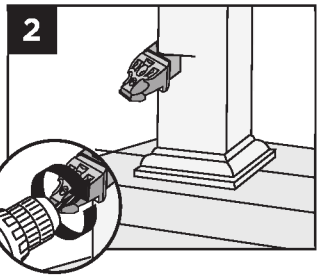

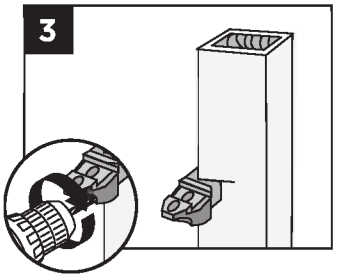

2. Position RSBs with adapter **(flat side DOWN)** for lower rail, mark and pre-drill screw holes with 1/8" (0.3 cm) drill bit on post.
3. Position RSBs with adapter **(flat side UP)** for top rail, mark and pre-drill screw holes with 1/8" (0.3 cm) drill bit on post.

Measuring and Cutting Rails

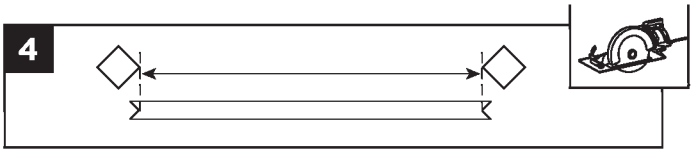

4. Measure from corner-to-corner between posts. Mark 45° cuts on rails with template on assembly tool. Center of "V's" is the distance from corner-to-corner for posts.

NOTE: *Subtract 1/16" (0.15 cm) from each end to accommodate rail gaskets.*

Attaching Top and Bottom RSBs

5. Attach RSBs with adapters to posts with wood screws *(provided)*.

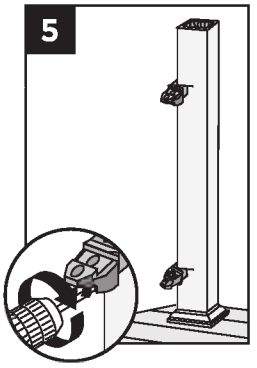

NOTES:

» *Drill at slight inward angle to drill holes on marks.*

» *Lay cut lower rail into position on decking surface between the posts before attaching the lower RSB. There may be some difficulty attaching the lower rail if you fail to do this.*

HOW TO INSTALL CROWN, UNIVERSAL, AND BEVELED BIRD'S MOUTH RAILING/CONTINUED
TREX TRANSCEND®

Installing Railings to RSB's

6. Attach with self-tapping screws *(provided)*.

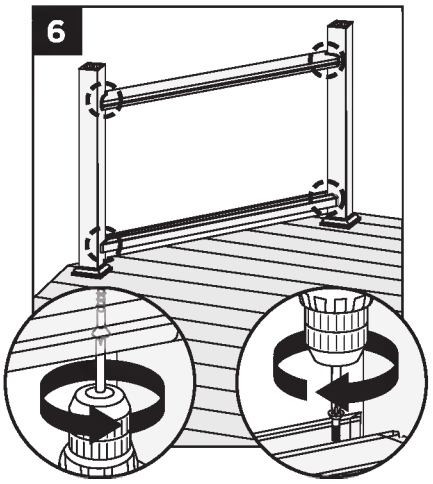

Using Miter Box Saw to Cut Rails

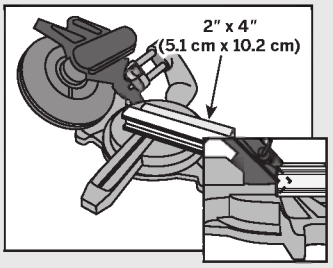

1. Place 2" x 4" (5.1 cm x 10.2 cm) on edge behind the rail to allow for complete cut.
2. Angle blade to 45°.
3. Set stop on saw so blade travels half the depth of rails. Several test cuts can be made on scrap material to accurately set the stop.
4. "V" cut both sides of the rail.

NOTE: *Transcend's crown, universal, as well as beveled rails will require different stop settings.*

HOW TO INSTALL CROWN, UNIVERSAL, AND BEVELED STAIR RAILING
TREX TRANSCEND®

Read all instructions BEFORE installation.

NOTE: *All Transcend railings and gaskets work* ***ONLY WITH STAIR SLOPES OF 32°-37°****.*

Installing Posts, Post Sleeve Skirts, and Post Sleeves for Stair Rails

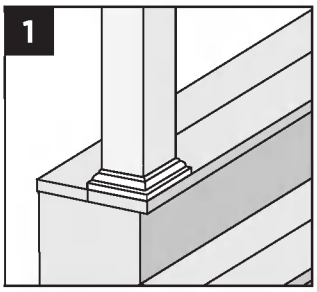

1. Install posts, post sleeve skirts, and post sleeves according to standard Transcend railing instructions. *See page 61.*
   - » In most cases, a post and post sleeve longer than 39" (99.1 cm) will be needed on the lower section of stair rail to accommodate stair angle.
   - » Make sure top and bottom posts for stairs are installed at nose of each tread.

Measuring and Cutting Railings

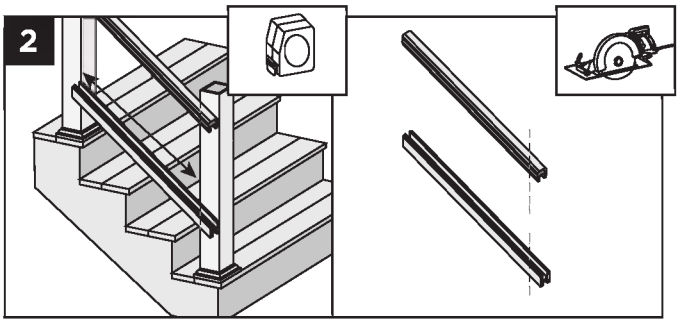

2. Set railing along the nose of the stair treads and mark line at each intersection. Cut rails on marks.

NOTE: *If using railing gaskets, subtract 1/16" (0.15 cm) maximum, from each end and cut.*

Positioning RSBs on BOTTOM Post

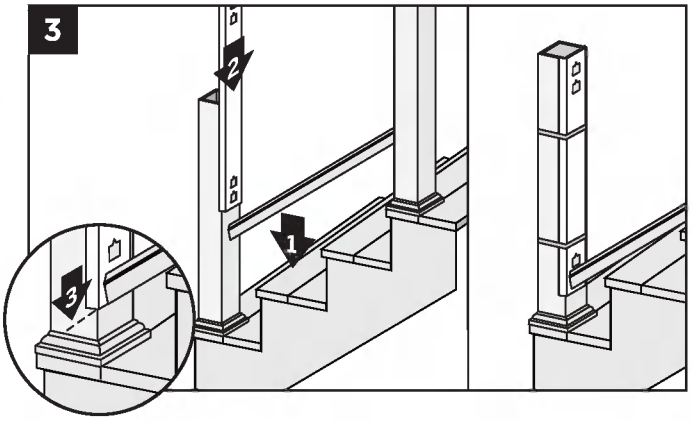

3. Position bottom rail between posts and slide TrexExpress™ railing assembly template into position with bottom rail outline on template aligned with end of bottom rail. Allow a minimum clearance of 1" (2.5 cm) from stair tread. Secure template with rubber bands. Remove rail.

Attaching RSBs to BOTTOM Post

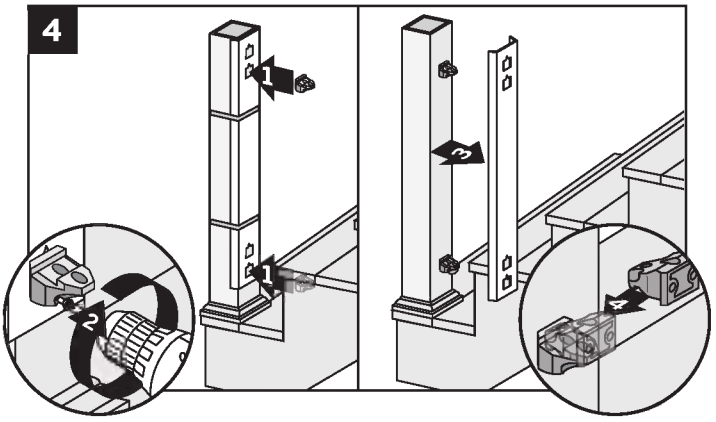

4. Attach upper and lower RSBs to bottom post, **flat side UP**, with wood screws provided. Remove template and place a second RSB, turned upside down, and interlock on each bracket.

HOW TO INSTALL CROWN, UNIVERSAL, AND BEVELED STAIR RAILING/CONTINUED
TREX TRANSCEND®

Positioning RSBs on UPPER Post

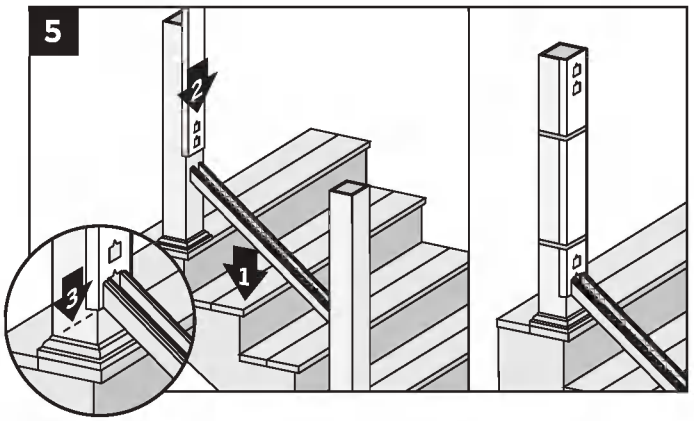

5. Position pre-cut bottom rail between posts. Slide TrexExpress™ railing assembly template into position, aligning bottom rail outline on template with end of bottom rail. Use rubber bands to hold template in place. Remove rail.

Attaching RSBs on UPPER Posts

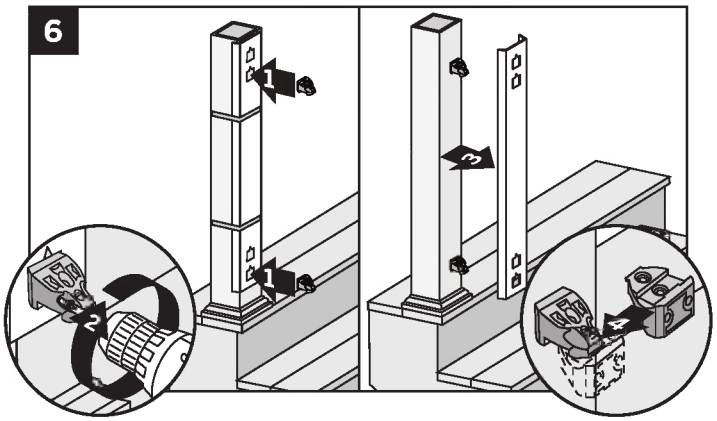

6. Attach upper and lower RSBs to top post, **flat side DOWN**. Remove template. Take second RSB, turn upside down and interlock into each bracket.

Complete Stair Rails Installation

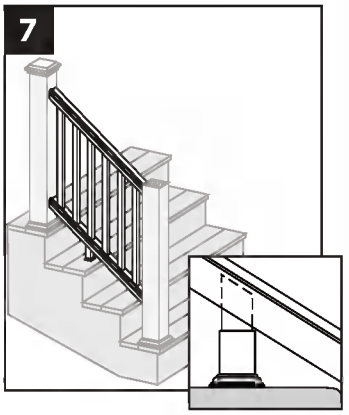

7. Install foot blocks prior to installing lower rail. *Refer to "How to Install Universal and Beveled Railing Foot Blocks" on page 78.* For stair application, cut top section of foot block at an angle to match rail, pre-drill, and fasten. Install top and bottom railings, balusters, and baluster spacers according to previous instructions based on the style railing that is installed.

Attaching Optional Gaskets

Crown and Beveled Stair Gasket Locations

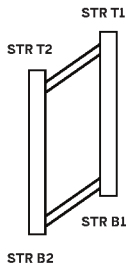

Universal Rail Stair Gasket Locations

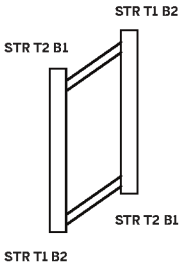

8. Stair railing gaskets are designed to fit at slopes of 32° to 37°. Gaskets are labeled in order to ensure correct location.

Attaching Post Caps

9. Secure post caps with silicone or PVC adhesive.

NOTE: *Clean-up any excess adhesive before drying.*

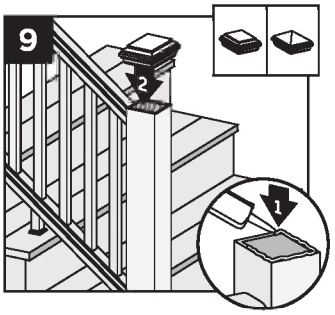

HOW TO INSTALL UNIVERSAL AND BEVELED RAILING FOOT BLOCKS

TREX TRANSCEND®

READ ALL IMPORTANT NOTES BELOW BEFORE REFERRING TO INDIVIDUAL FOOT BLOCK INSTRUCTIONS.

IMPORTANT NOTES:

- ***BEVELED RAILING NOTES:***
  - ***IF YOU HAVE A FOOT BLOCK WITH A DATE CODE OF ART-FTB-1108 ON THE INSTRUCTION SHEET (LOCATED ON BOTTOM RIGHT CORNER OF INSTRUCTIONS), THE FOOT BLOCK WILL NEED TO BE TRIMMED PRIOR TO ATTACHMENT TO BOTTOM RAIL. SEE STEPS 1A - 1C FOR DETAILS.***
  - ***IF YOU HAVE A FOOT BLOCK WITH A DATE CODE OF TR-FTB-0912 ON THE INSTRUCTION SHEET, TRIMMING IS NOT REQUIRED.***
- ***Foot blocks must be placed before installing bottom rails.***
- ***One centered foot block is required for every section of railing or stairway section.***

Trimming Foot Block for Beveled Railings Only

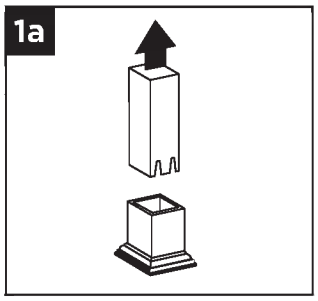

1a. Dismantle foot block into two sections – this can be done by fully extending the upper beam and continuing to pull this through which will separate the foot block into two sections.

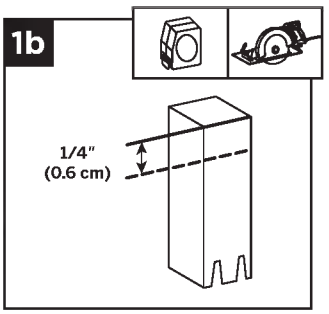

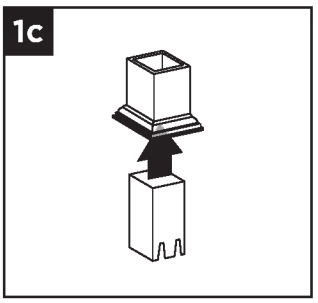

1b. Measure 1/4" (0.6 cm) at solid portion of upper beam and cut here. **(DO NOT cut from bottom of the beam which shows the pre cut edges that mates to the base of the foot block.)**

1c. Re-assemble the foot block by pushing the upper beam through the underside of the base of the foot block and allowing this to catch/snap into position. **DO NOT** fully extend at this time.

TREX REVEAL® RAILING

NOTES:

- ***» REVEAL RAILINGS ARE DESIGNED TO BE ATTACHED WITH POSTS INSTALLED AT CLEAR SPAN OF 6' (1.83 M) OR 8' (2.44 M).***
- ***» IF INSTALLING AT EXACT SPAN LENGTHS OF 6' (1.83 M) OR 8' (2.44 M), AND USING POST TO POST CONFIGURATION, THE BOTTOM RAIL WILL NOT NEED TO BE CUT, BUT THE TOP RAIL WILL NEED TO BE MEASURED (MAKING SURE BALUSTERS LINE UP VERTICALLY) AND CUT.***
- ***» IF INSTALLING AT EXACT SPAN LENGTHS OF 6' (1.83 M) OR 8' (2.44 M), AND USING CROSSOVER POST CONFIGURATION (SPANS FROM ONE CROSSOVER POST TO ANOTHER CROSSOVER POST), BOTH THE BOTTOM RAIL AND TOP RAIL WILL NOT NEED TO BE CUT.***
- ***» IN ADDITION, AT ALL FINAL END POST CONFIGURATIONS, TOP RAIL WILL NEED TO BE MEASURED (MAKING SURE BALUSTERS LINE UP VERTICALLY) AND CUT.***
- ***» FOR STAIR ATTACHMENTS, MAKE SURE THAT 53" (134.6 CM) POSTS ARE USED AT BOTH TOP AND BOTTOM OF STAIRS AND IF NECESSARY CUT TO CORRECT HEIGHTS. REFER TO STAIR INSTRUCTIONS FOR COMPLETE DETAILS ON THIS.***
- ***» SEE INFORMATION WITHIN DETAILED INSTRUCTIONS FOR MORE INFORMATION.***

PARTS

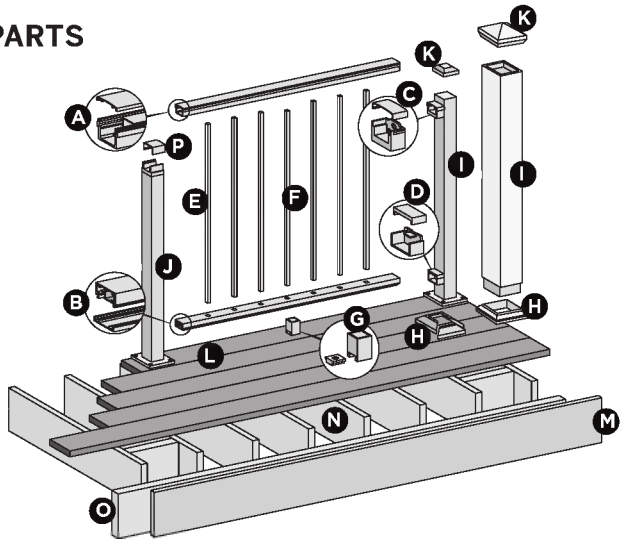

BALUSTER OPTIONS

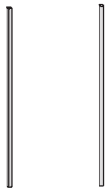

DETERMINING BALUSTERS NEEDED				
Baluster Type	**Per 6' Section**	**Per 8' Section**	**Per 6' Stair Section**	**Per 8' Stair Section**
Square	15	20	13	17
Round	15	20	13	17

NOTE: THIS IS OVERVIEW OF ALL RAILING COMPONENTS FOR REVEAL HORIZONTAL APPLICATIONS - REFER TO DETAILED INSTRUCTIONS FOR SPECIFIC RAILING CONFIGURATIONS.

A. Reveal top rail and crowned cover
   - 6' (actual length 73.5" [186.7 cm])
   - 8' (actual length 97.5" [247.7 cm])

B. Reveal bottom rail and flat cover
   - 6' Rail (actual length 71.5" [181.6 cm])
   - 6' Cover (actual length 70.0" [177.8 cm])
   - 8' Rail (actual length 95.5" [242.6 cm])
   - 8' Cover (actual length 94.0" [238.8 cm])

C. Reveal upper rail bracket and cover

D. Reveal lower rail bracket and cover

E. Reveal balusters (square or round)

F. Reveal center baluster (square or round)

G. Reveal foot block**

H. Reveal post skirt or post sleeve skirt*

I. Reveal post*
   - 36" (actual length 37" [94.0 cm])
   - 42" (actual length 43" [109.2 cm])

   or Trex 4" x 4" Post Sleeve*
   - 36" (actual length 39" [99.1 cm])
   - 42" (actual length 45" [114.3 cm])

J. Reveal crossover post*
   - 36" (actual length 34.5" [87.6 cm])
   - 42" (actual length 40.5" [102.9 cm])

K. Reveal post cap or post sleeve cap*

L. Trex decking

M. TrexTrim™ or Trex™ Fascia

N. Code-approved wood joist 2" x 8" *(5.1 cm x 20.3 cm)* or larger

O. Code-approved wood rim joist 2" x 8" *(5.1 cm x 20.3 cm)* or larger

P. Crossover bracket cover *(supplied with crossover post)*

* *Item not included in Reveal Railing kits. Both 4" x 4" (10.2 cm x 10.2 cm) and 6" x 6" (15.2 cm x 15.2 cm) post sleeves are designed to fit over 4" x 4" pressure-treated post.*

** *Required ONLY for All Clear Span Applications over 6' (1.83 m) when smaller fixed baluster is fully centered. or unsupported spans greater than 5' (1.52 m) (example: 8' (2.44 m) span cut into one 5' (1.52 m) span and one 3' (0.91 m) span would require foot block under 5' (1.52 m) span since smaller fixed baluster is no longer centered). Included with 8' (2.44 m) railing kits.*

NOTE: *If installing 42" (106.7 cm) railing, and using pressure-treated posts with Trex post sleeves, ensure that a longer pressure-treated post is used along with longer post sleeve, both cut to a height of 46" (116.8 cm) from decking surface.*

BRACKET HARDWARE – HORIZONTAL APPLICATIONS (INCLUDING HORIZONTAL SWIVEL BRACKETS)

TREX REVEAL®

HORIZONTAL RAILING HARDWARE

AA. Lower rail bracket
BB. Lower rail bracket cover
CC. Upper rail bracket cover
DD. Upper rail bracket

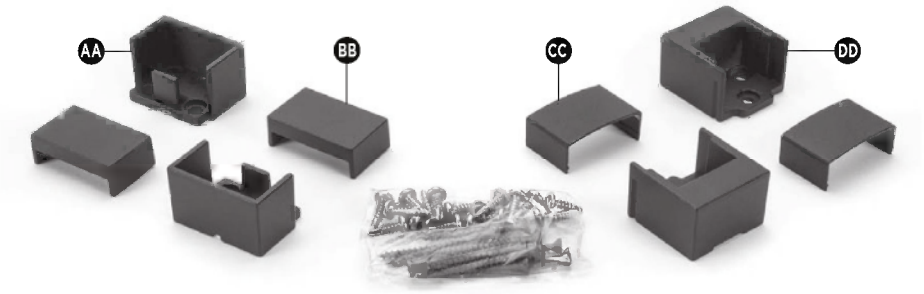

FOOT BLOCK COMPONENTS

EE. Foot block base
FF. Foot block support

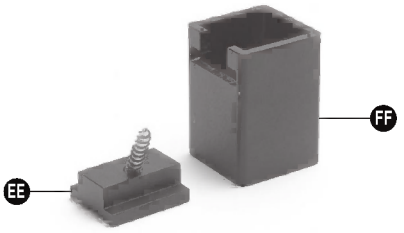

HORIZONTAL SWIVEL HARDWARE

GG. Swivel base
HH. Horizontal swivel bracket top rail
II. Horizontal swivel bracket top rail cover
JJ. Horizontal swivel bracket bottom rail cover
KK. Horizontal swivel bracket bottom rail
LL. Swivel base cover

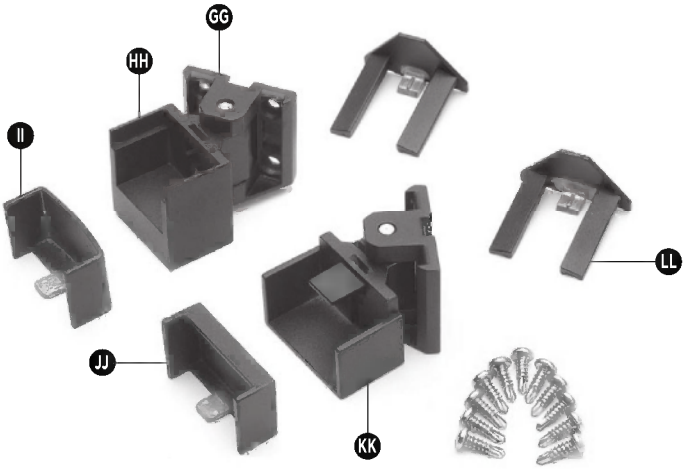

BRACKET HARDWARE – STAIR APPLICATIONS (INCLUDING STAIR SWIVEL BRACKETS, STAIR CROSSOVER BRACKET, AND COMPOUND SWIVEL BRACKETS)

TREX REVEAL®

FIXED BRACKET – STAIR HARDWARE

AA. Bottom stair bracket and cover – Lower rail
BB. Top stair bracket and cover – Lower rail
CC. Fastener Pack
DD. Bottom stair bracket and cover – Upper rail
EE. Top stair bracket and cover – Upper rail

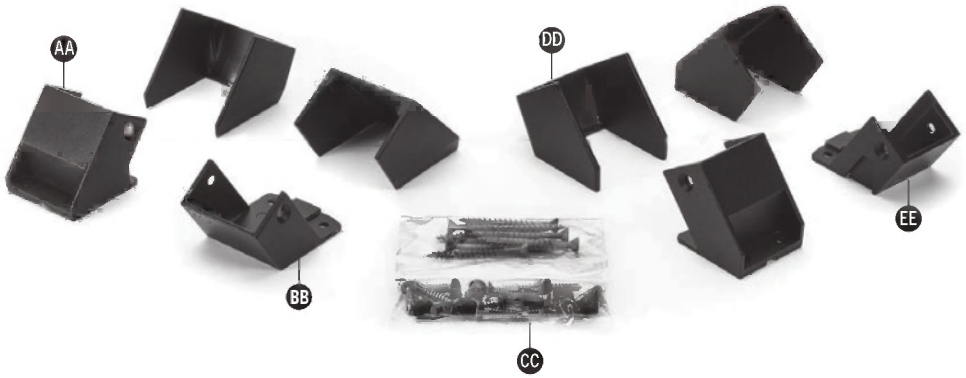

SWIVEL BRACKET – STAIR HARDWARE

FF. Swivel top rail bracket and cover – Stair
GG. Swivel bottom rail bracket and cover – Stair
HH. Fastener covers
II. Fastener pack

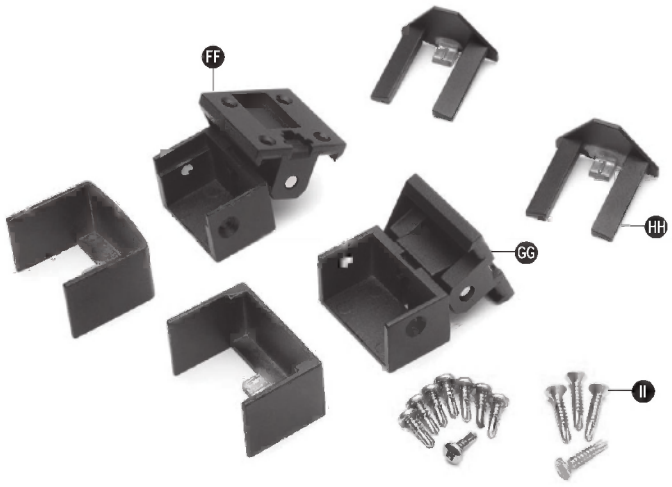

BRACKET HARDWARE – STAIR APPLICATIONS (INCLUDING STAIR SWIVEL BRACKETS, STAIR CROSSOVER BRACKET, AND COMPOUND SWIVEL BRACKETS)/CONTINUED

TREX REVEAL®

COMPOUND SWIVEL BRACKET – STAIR HARDWARE

JJ. Compound Swivel Top Rail Bracket and Cover – Stair
KK. Compound Swivel Bottom Rail Bracket and Cover – Stair
LL. Fastener Covers
MM. Fastener Pack

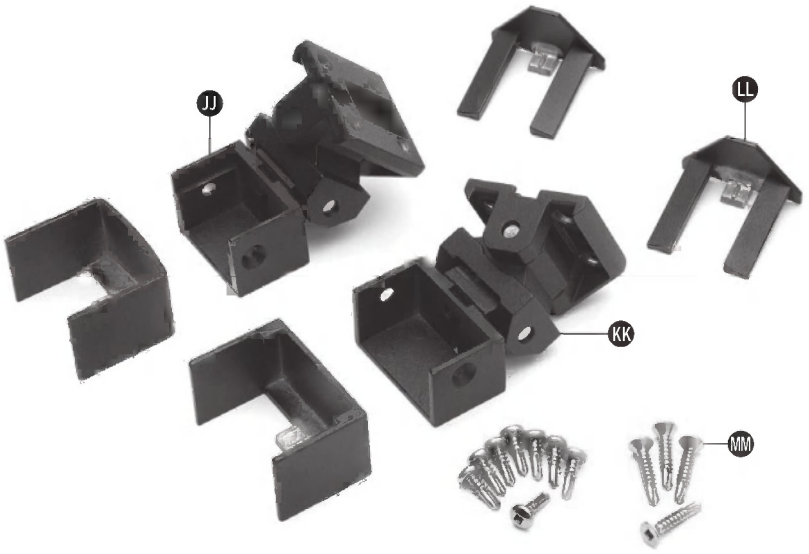

SWIVEL CROSSOVER BRACKET KIT – STAIR HARDWARE

NN. Swivel Crossover Bracket – Stair
OO. Post to Bracket Fasteners (not shown)

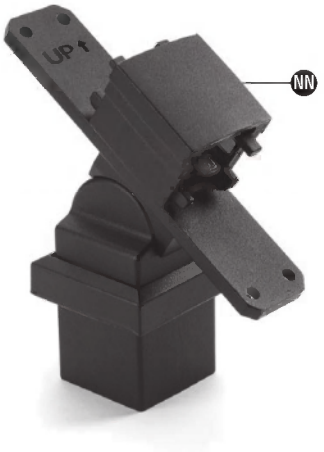

LOCATION AND INSTALLATION OF POSTS
TREX REVEAL®

IMPORTANT NOTES:

- ***EACH POST MUST BE ATTACHED AS DETAILED AS DESCRIBED TO ENSURE A CODE COMPLIANT AND SAFE INSTALLATION.***
- ***ALWAYS REFER TO YOUR LOCAL BUILDING CODE OFFICIAL PRIOR TO INSTALLING ANY RAILING SYSTEM TO ENSURE ALL CODE AND SAFETY REQUIREMENTS ARE MET. TREX® CANNOT BE HELD RESPONSIBLE FOR IMPROPER OR NON-RECOMMENDED INSTALLATIONS.***
- ***WHEN INSTALLING REVEAL POSTS ON ACQ OR CCA SURFACES, USE AN APPROPRIATE ISOLATION BARRIER BETWEEN POST AND SURFACE (CONTACT LOCAL BUILDING CODE OFFICIAL IF REQUIRED).***
- ***FOR INSTALLING STANDARD REVEAL POST AND/OR REVEAL CROSSOVER POSTS, SEE BELOW.***
- ***FOR PRESSURE-TREATED POSTS, POST SLEEVES, AND SKIRTS, SEE DETAILED INSTRUCTIONS PROVIDED WITH REVEAL RAILING KITS.***

Railing Configurations

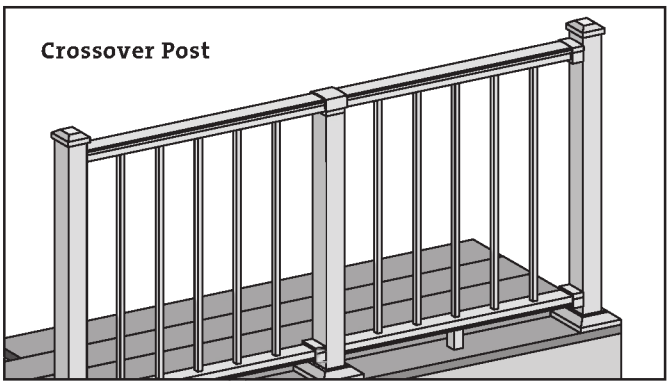

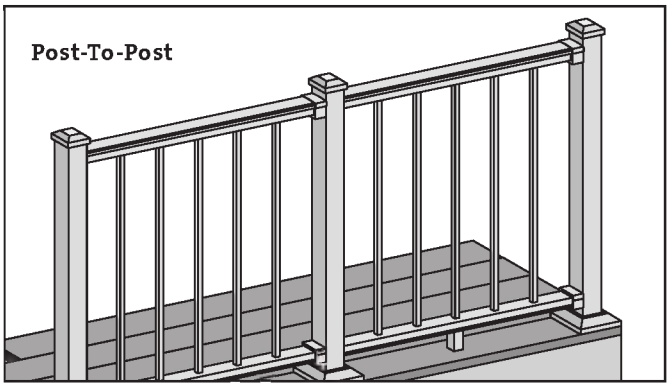

NOTE: *Reveal railings can be installed using Reveal posts or pressure-treated posts.*

- *For installing Standard Reveal post and/or Reveal crossover posts, see Step 1.*
- *For Pressure-Treated Posts, Post Sleeves, and Skirts, see page 85.*

TOOLS AND MATERIALS NEEDED

- Drill and/or screw gun
- 1/2" (1.27 cm) drill bit for wood
- Blocking - 2" x 8" (5.1 cm x 20.3 cm) pressure-treated Southern Yellow Pine or equivalent
- Qty 36 (per post) - 3" pressure- treated compatible wood screws

TOOLS NEEDED—ATTACHMENT OF RAILINGS

- Drill and/or screw gun
- #2 Square head bit
- 1/8" (.32 cm), 7/64" (0.28 cm) drill bits (for use when predrilling railing to attach bracket)
- Non-ferrous metal miter saw blade
- Ratchet/wrench
- Rubber mallet

NOTE: *For Reveal Post installation - refer to detailed tool section.*

CODE APPROVED POST APPLICATIONS		
POST SIZE	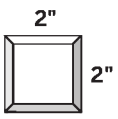 **2x2 Post**	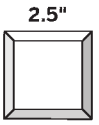 **2.5x2.5 Post (IRC)**
< 30" height decking	Acceptable (Code Approval not Applicable)	Acceptable (Code Approval not Applicable)
IRC Compliant	No	Yes
IBC Compliant	No	No

Installing Standard Reveal Posts and/or Reveal Crossover Posts on Pressure-Treated Wood Framing (Corner Post Installation)

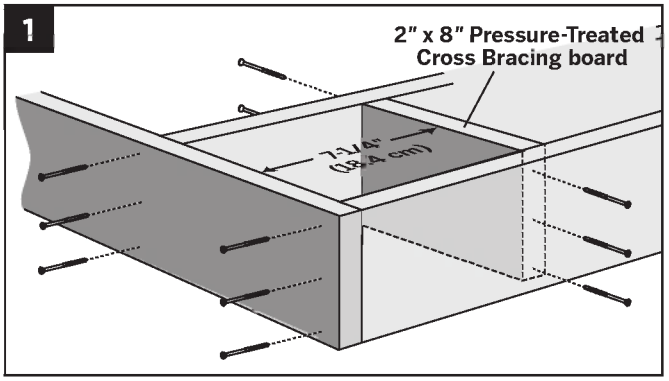

1. Install 2" x 8" (5.1 cm x 20.3 cm) cross bracing frame in between joists at 7 1/4" (18.4 cm). Attach a total of twelve 3" (7.6 cm) pressure-treated compatible screws *(not provided)*.

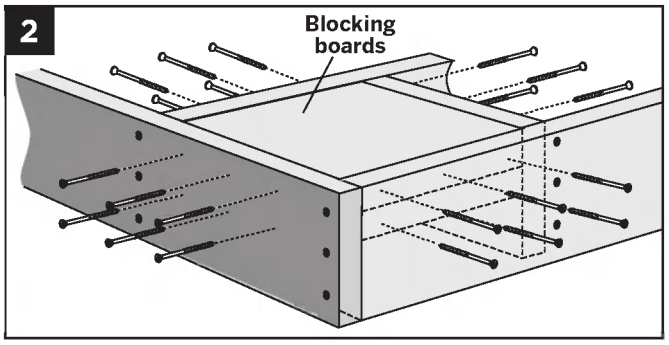

2. Install two 2" x 8" (5.1 cm x 20.3 cm) boards as blocking under post location. Securely attach blocking using a total of 24 3" (7.6 cm) pressure-treated compatible screws *(not provided)*.

NOTE: *TO ENSURE THE BLOCKING IS FULLY SECURE, USE THE AMOUNT OF SCREWS SHOWN ABOVE.*

Line Post Installation

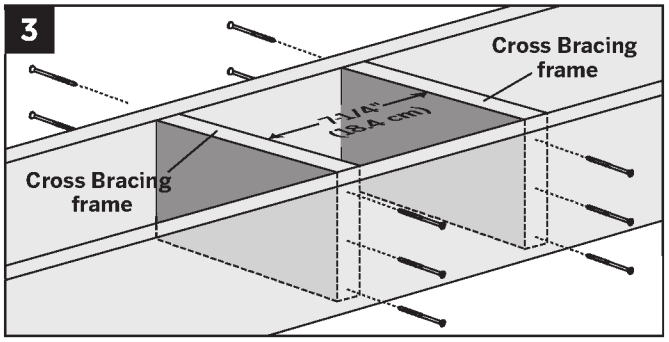

3. Install two 2" x 8" (5.1 cm x 20.3 cm) cross bracing frames in between joists at 7 1/4" (18.4 cm). Attach a total of twelve 3" (7.6 cm) pressure-treated compatible screws *(not provided)*.

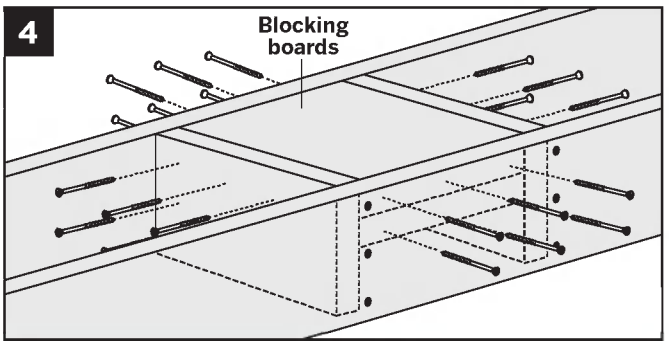

4. Install two 2" x 8" (5.1 cm x 20.3 cm) boards as blocking under post location. Securely attach blocking using a total of 24 3" (7.6 cm) pressure-treated compatible screws *(not provided)*

5. ***NOTE:*** *RIM JOIST REMOVED TO SHOW PROPER ATTACHMENT OF HARDWARE.*

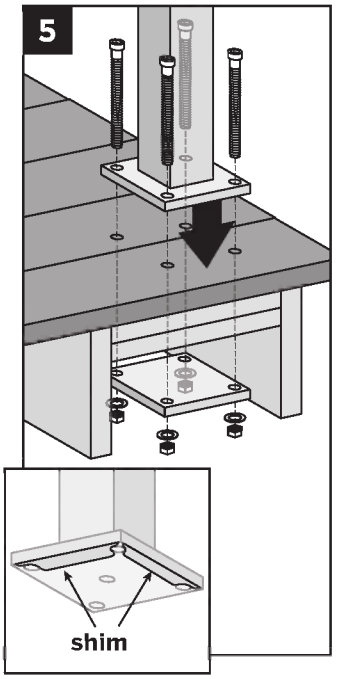

Level posts if necessary using stainless steel leveling shims *(provided)*. Ensure that post is placed on decking surface so that it clears the rim joist and there is enough clearance on the underside blocking for the back plate to be installed.

Attach posts using four 5/16" x 5/ 1/2" (0.79 cm x 14.0 cm) hex cap bolts, washers, and nuts, along with using metal back plate on underside of blocking. Metal back plate **MUST** be installed under the decking to ensure this will meet code compliance. Reference SKU part number SSPOSTHWDECK for required hardware and metal plate.

IMPORTANT NOTE:
IF INSTALLING 42" (106.7 CM) RAILING, AND USING PRESSURE-TREATED POSTS WITH TREX POST SLEEVES, ENSURE THAT A LONGER PRESSURE-TREATED POST IS USED ALONG WITH LONGER POST SLEEVE, BOTH CUT TO A HEIGHT OF 46" (116.8 CM) FROM DECKING SURFACE.

Installing Pressure-treated Posts, Post Sleeves, and Skirts

6. Attach posts using 1/2" (1.3 cm) carriage bolts.
   - » Minimum joist size is 2" x 8" (5.1 cm x 20.3 cm).
   - » Top bolts must be 1" (2.5 cm) from top of joists.
   - » Bottom bolts must be 5-1/8" (13 cm) from top bolts.

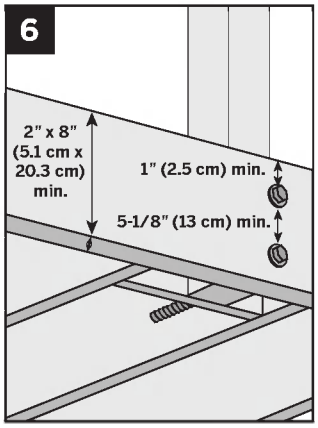

NOTE: *Blocking can be added for extra strength.*

7. Slide post sleeve skirt over post and down to rest on decking surface. Slide post sleeve over post and position inside post sleeve skirt.

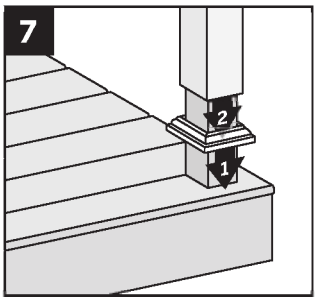

NOTE: *Shims can be used to plumb post sleeves.*

HOW TO INSTALL HORIZONTAL RAILING
TREX REVEAL®

Attaching Brackets Using Reveal Posts

TIP: Use a clamp to help hold brackets in place while fastening with screws.

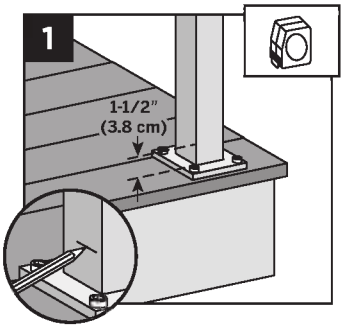

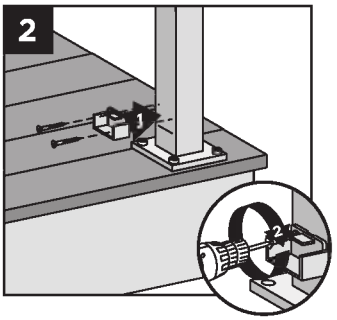

1. For both post-to-post and post-to-crossover post configurations, measure 1-1/2" (3.8 cm) up from top of post base plate (or 1-7/8" [4.8 cm] from decking surface). Mark with light line.
2. Center lower bracket on post **above** the marked line and attach using (2) self-tapping screws *(provided)*.

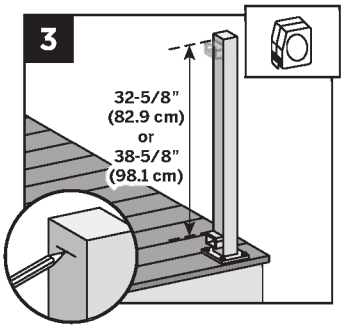

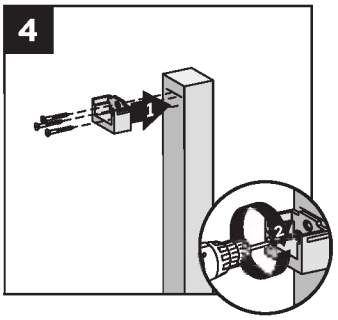

3. Measure up 32-5/8" (82.9 cm) for 36" (91.4 cm) tall railing or 38-5/8" (98.1 cm) for 42" (106.7 cm) tall railing from top of lower rail bracket. Mark with a light line.
4. Center upper bracket on post **below** marked line and attach using (3) self-tapping screws *(provided)*.

NOTE: *Upper bracket is not required on crossover post configuration.*

Attaching Brackets Using Pressure-treated Posts and Post Sleeves

TIP: Use a clamp to help hold brackets in place while fastening with screws.

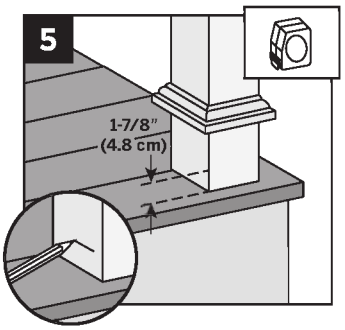

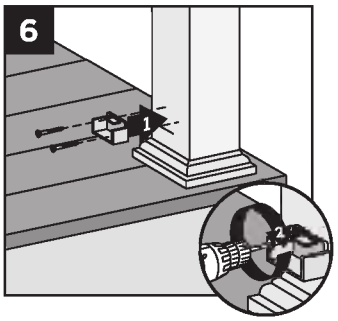

5. Measure 1-7/8" (4.8 cm) up from deck surface to bottom of bracket. Slide skirt up to allow for proper measurement, then push skirt back down onto surface of decking **BEFORE ATTACHING BRACKET**. Mark with light line.
6. Center lower bracket on post **above** the marked line and attach using (2) 2" (5.1 cm) wood screws *(provided)*.

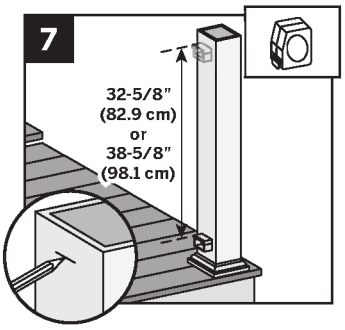

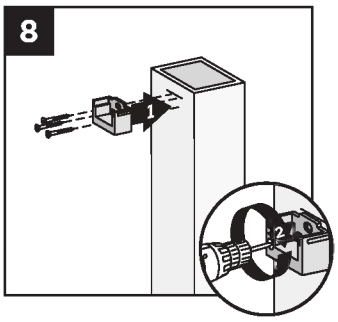

7. Measure up 32-5/8" (82.9 cm) for 36" (91.4 cm) tall railing or 38-5/8" (98.1 cm) for 42" (106.7 cm) tall railing from top of lower rail bracket. Mark with a light line.
8. Center upper bracket on post **below** marked line and attach using (3) 2" (5.1 cm) wood screws *(provided)*.

NOTES:

- ***» REVEAL RAILINGS ARE DESIGNED TO BE ATTACHED WITH POSTS INSTALLED AT CLEAR SPAN OF 6' (1.83 M) OR 8' (2.44 M).***
- ***» IF INSTALLING AT EXACT SPAN LENGTHS OF 6' (1.83 M) OR 8' (2.44 M), AND USING POST-TO-POST CONFIGURATION, THE BOTTOM RAIL WILL NOT NEED TO BE CUT, BUT THE TOP RAIL WILL NEED TO BE MEASURED (MAKING SURE BALUSTERS LINE UP VERTICALLY) AND CUT.***
- ***» IF INSTALLING AT EXACT SPAN LENGTHS OF 6' (1.83 M) OR 8' (2.44 M), AND USING CROSSOVER POST CONFIGURATION (SPANS FROM ONE CROSSOVER POST TO ANOTHER CROSSOVER POST), BOTH THE BOTTOM RAIL AND TOP RAIL WILL NOT NEED TO BE CUT.***
- ***» IN ADDITION, AT ALL FINAL END POST CONFIGURATION, TOP RAIL WILL NEED TO BE MEASURED (MAKING SURE BALUSTERS LINE UP VERTICALLY) AND CUT.***
- ***» FOR ODD SPAN LENGTHS, BOTH TOP RAIL AND BOTTOM RAIL WILL NEED TO BE MEASURED (MAKING SURE BALUSTERS LINE UP VERTICALLY) AND CUT. ENSURE THAT BALUSTERS ARE SPACED WITH AN EQUAL DISTANCE ON EACH SIDE OF THE POST.***
- ***» WHEN RAILINGS ARE CUT TO ODD SPANS, ALL SPANS GREATER THAN 5' (1.52 M) (EXAMPLE: 8' (2.44 M) SPAN CUT INTO ONE 5' (1.52 M) SPAN AND ONE 3' (0.91 M) SPAN) WOULD REQUIRE FOOT BLOCK UNDER 5' (1.52 M) SPAN SINCE SMALLER FIXED BALUSTER IS NO LONGER CENTERED).***

How to Measure and Cut Bottom and Top Railings (WHEN REQUIRED)

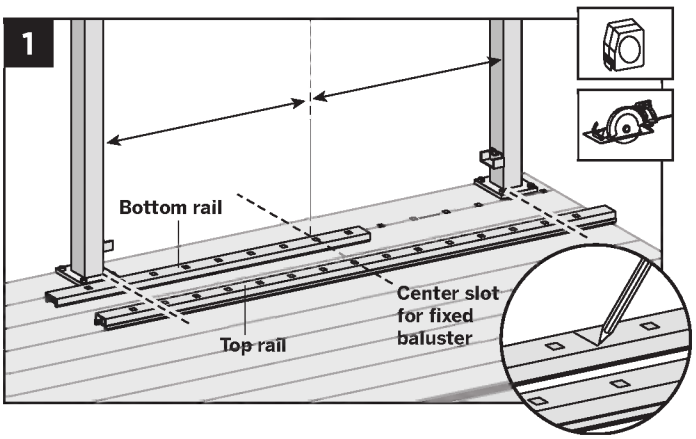

1. Position bottom and top rails between posts and align with bottom bracket. Align the center baluster slot in both rails with the middle of the span between posts.* This will allow an equal number of baluster holes on each side of center slot. Mark bottom rail and top rail at each end (ensure both rails are centered between posts).

** In some cases due to odd railing spans, the center baluster may need to be offset in one direction to ensure there is enough room at both post locations for balusters to be placed. review this BEFORE cutting any railings to ensure all balusters are equally spaced.*

Cutting Bottom Rail and Bottom Rail Cover

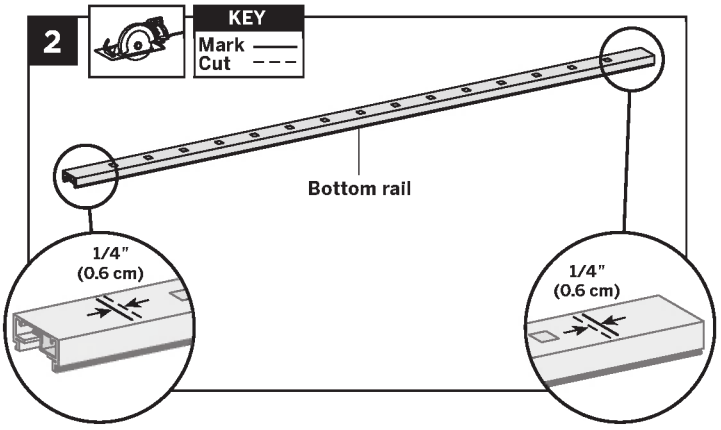

2. Cut each end of bottom rail 1/4" (0.6 cm) shorter than mark on each end to allow for fit into bottom rail brackets.

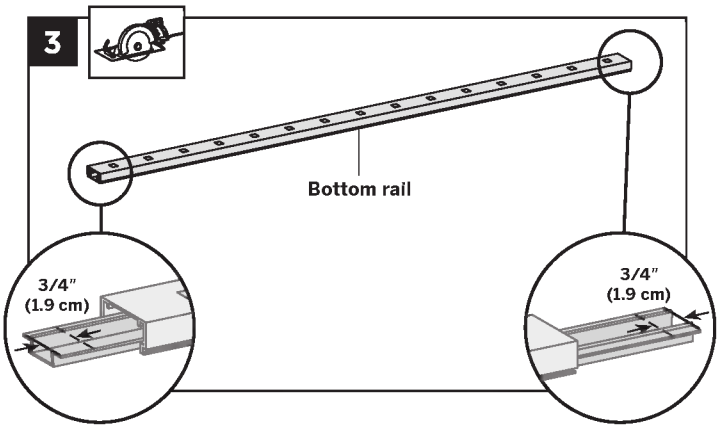

3. Slide rail insert out and cut 3/4" (1.9 cm) **FROM EACH SIDE** of insert, then slide back inside rail and center.
4. Mark and cut bottom rail cover 1-1/2" (3.8 cm) shorter than bottom rail.

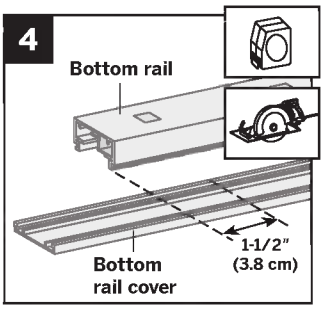

Cutting Top Rail
Option 1:
For Post-to-Post Configuration

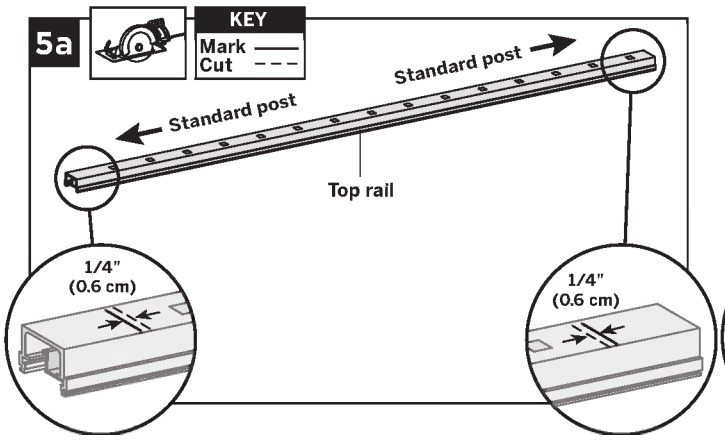

5a. Cut each end of top rail 1/4" (0.6 cm) shorter than mark to allow for fit into top rail brackets.

Cutting Top Rail
Option 2:
For Post-to-Crossover-Post Configuration

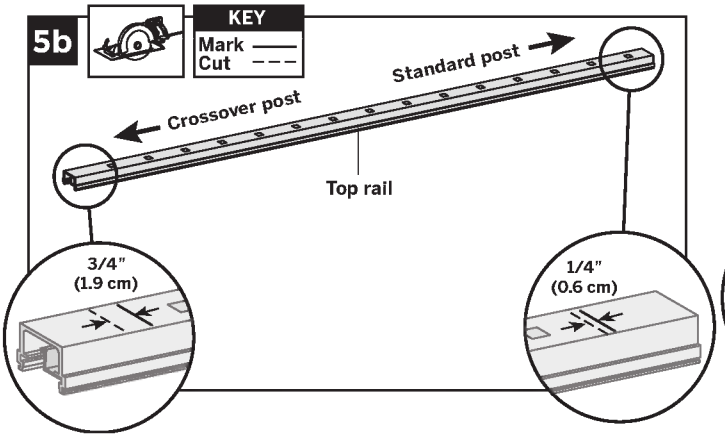

5b. Top rail must be cut differently on each side of the rail. Railing side that attaches to standard post should be cut 1/4" (0.6 cm) shorter than the mark to allow for fit into top rail bracket. Railing side that attaches to the crossover post should be cut 3/4" (1.9 cm) **LONGER** than the mark to allow for fit into the crossover post bracket.

Cutting Top Rail
Option 3:
For Crossover-Post-to-Crossover-Post Configuration

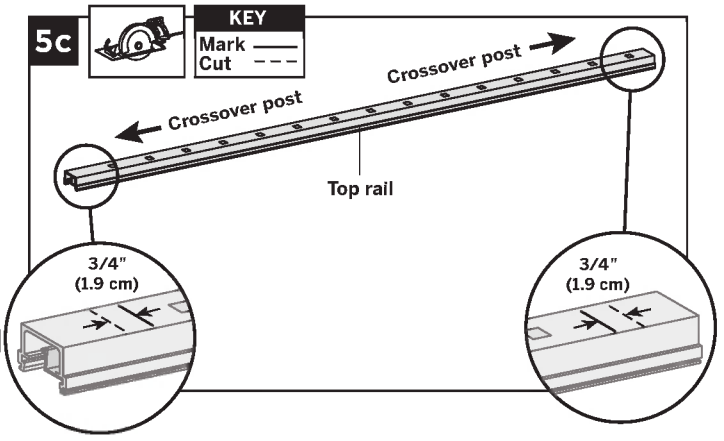

5c. Cut each end of top rail 3/4" (1.9 cm) **LONGER** than the mark to allow for fit into the crossover post bracket on each side.

Cutting Top Rail Insert and Cover

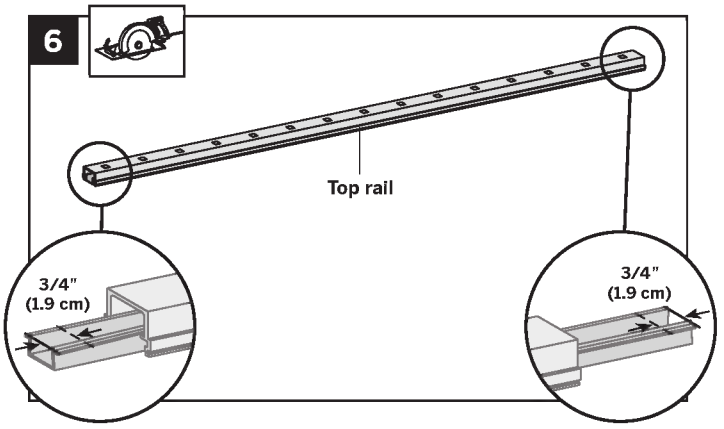

6. Slide rail insert out and cut 3/4" (1.9 cm) **FROM EACH SIDE** of insert, then slide back inside rail and center.
7. Mark and cut top rail cover same length as top rail for all top rail configurations.

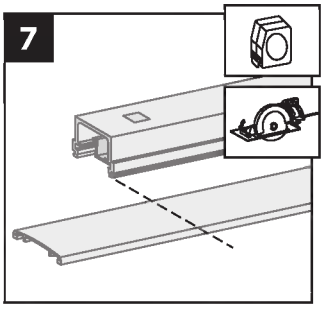

Attaching Center Baluster to Bottom Rail

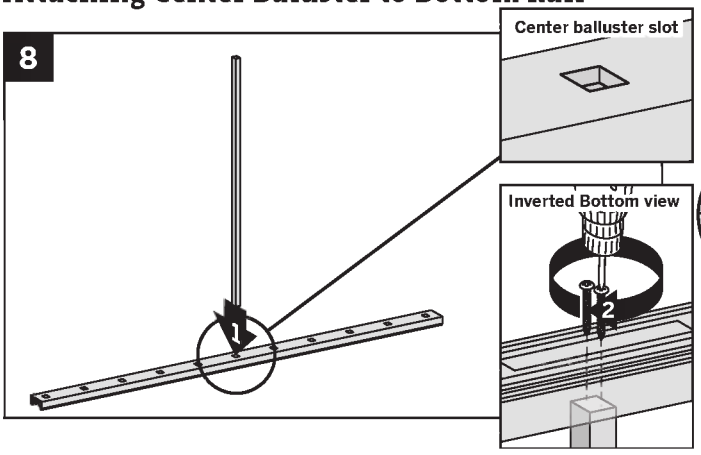

8. Attach shorter, center baluster in center slot in bottom rail using (2) #8 x 1-1/4" (3.2 cm) screws *(provided)*.

Attaching Bottom Rail Cover and Bottom Rail to Brackets

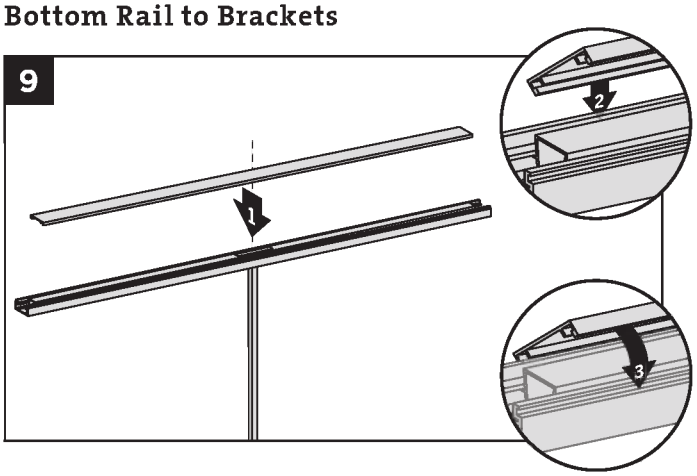

9. Attach "flat" bottzom rail cover to bottom rail by first centering cover on bottom rail (this will allow gap on each end of bottom rail for placement into brackets). Align cover on one side of bottom rail in slot on side of rail. Then starting from one end of rail snap cover onto opposing slot working down the length of rail. In some cases, a **rubber mallet** may facilitate the fastening using **GENTLE** tapping.

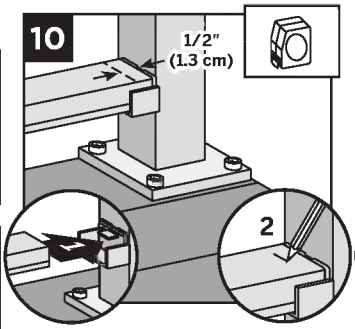

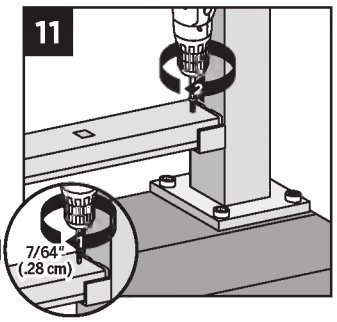

10. Set bottom rail into bottom brackets. Tabs on brackets will be inside of bottom rail (not shown when railing is attached). To ensure fit into tab, measure and mark 1/2" (1.3 cm) out from side of post.
11. Attach bottom rail to bottom bracket by fastening through marked measurement on top of rail into tab on bottom bracket using (1) self-tapping screw each side *(provided)*.

NOTE: Pre-drilling is recommended (7/64" [0.28 cm] drill bit) for attachment of railing to bracket.

Installing Remaining Balusters into Bottom Rail

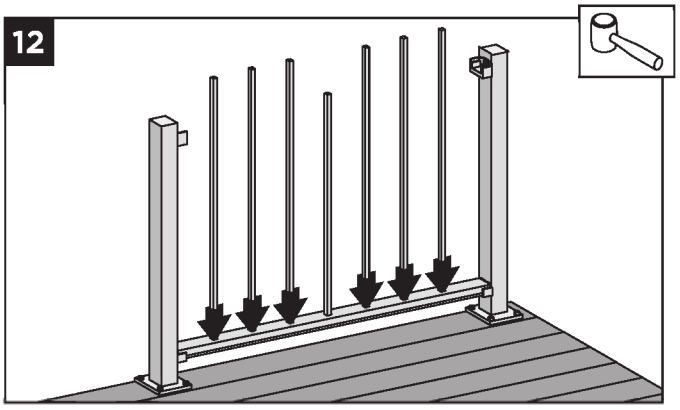

12. Place remaining balusters into holes in lower rail by snapping fully into place. In some cases, a **rubber mallet** may facilitate the fastening using **GENTLE** tapping.

Attaching Upper Railings

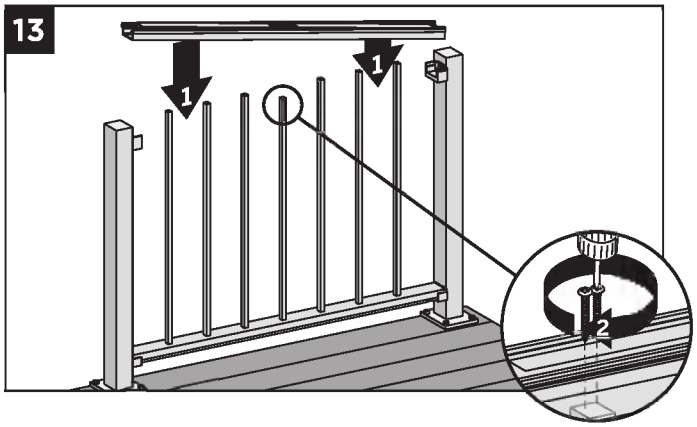

13. Working from one end of upper rail, snap balusters into upper rail working down length of rail. Fasten center baluster into center slot using (2) #8 x 1-1/4" (3.2 cm) screws *(provided)*.
14. For post- to-post configuration, fasten upper rail to each bracket by installing screws diagonally through upper rail into bracket using (2) self-tapping screws each side *(provided)*.

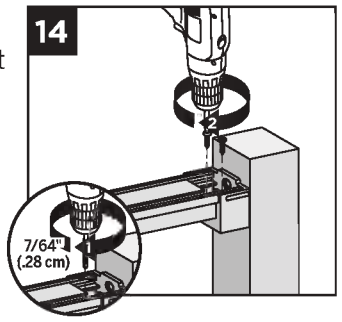

NOTE: Pre-drilling is recommended (7/64" [0.28 cm] drill bit) for attachment of railing to bracket.

15. For crossover post configuration, fasten upper rail to crossover post by installing screws diagonally through upper rail into post using (2) self-tapping screws each side *(provided)*.

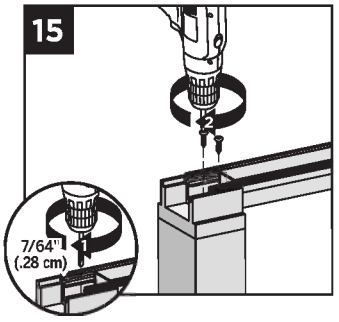

NOTE: Pre-drilling is recommended (7/64" [0.28 cm] drill bit) for attachment of railing to post.

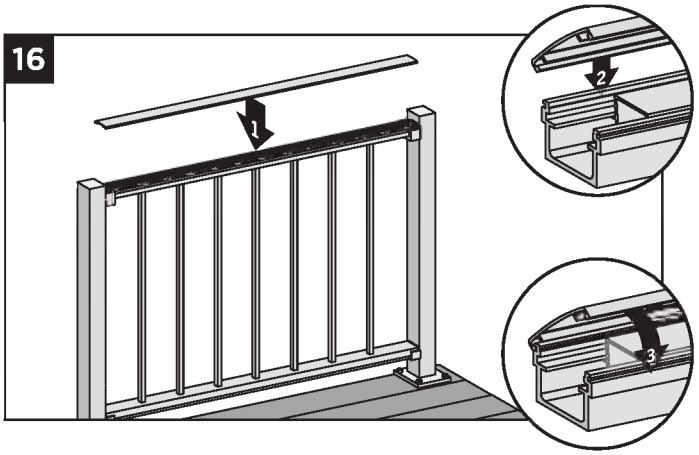

16. Attach "crowned" upper rail cover to upper rail by aligning cover on one side of rail. Then starting from one end of rail, snap cover onto opposing slot working down length of rail. A **rubber mallet** may facilitate the fastening using **GENTLE** tapping.

Attaching Bracket Covers, Skirts, and Caps

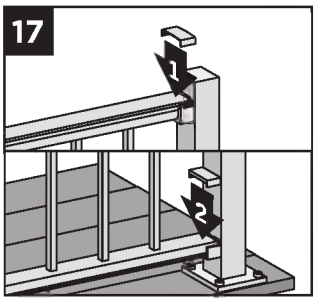

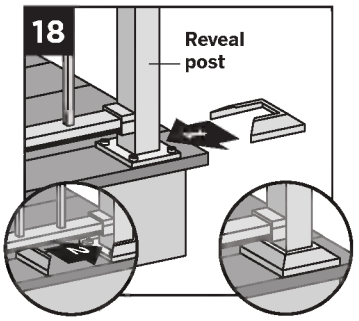

17. Attach corresponding bracket covers over opening in upper and bottom rails.
18. Attach provided post skirt to bottom of posts when using Reveal posts.

HOW TO INSTALL HORIZONTAL RAILING/CONTINUED
TREX REVEAL®

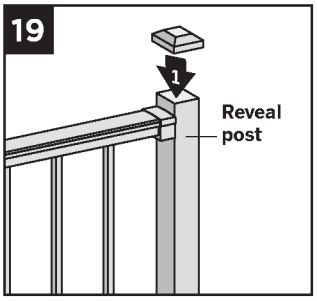

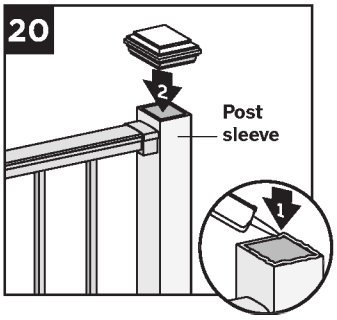

19. Attach post caps to Reveal posts (use of **rubber mallet** may be required for secure attachment).
20. Attach post caps to post sleeves using external grade PVC construction adhesive.
21. For crossover post configuration, attach crossover post cap to crossover post.

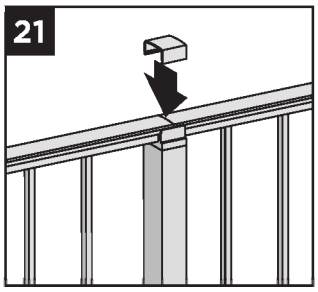

HOW TO INSTALL HORIZONTAL SWIVEL BRACKETS
TREX REVEAL®

Attaching Swivel Bracket Base using Reveal Posts

TIP: Use a clamp to help hold brackets in place while fastening with screws.

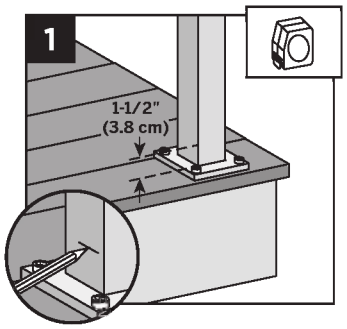

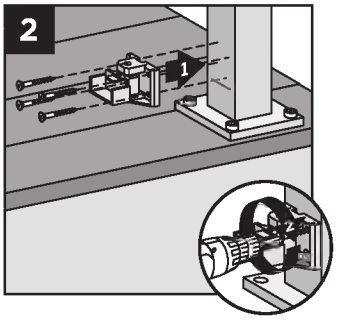

1. For both post to post and post to crossover post configurations, measure 1-1/2" (3.8 cm) up from top of post base plate (or 1-7/8" [4.8 cm] from decking surface). Mark with light line.
2. Center lower bracket on post **above** the marked line and attach using (4) self-tapping screws *(provided)*.

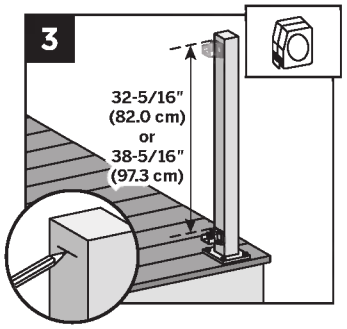

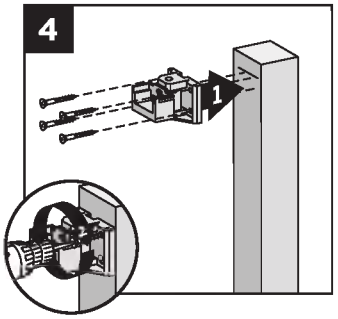

3. Measure up 32-5/16" (82.0 cm) for 36" (91.4 cm) tall railing or 38-5/16" (97.3 cm) for 42" (106.7 cm) tall railing from top of lower rail bracket. Mark with a light line.
4. Center upper bracket on post **below** marked line and attach using (4) self-tapping screws *(provided)*.

NOTE: *Upper bracket is not required on crossover post configuration.*

Attaching Brackets Using Pressure-treated Posts and Post Sleeves

TIP: Use a clamp to help hold brackets in place while fastening with screws.

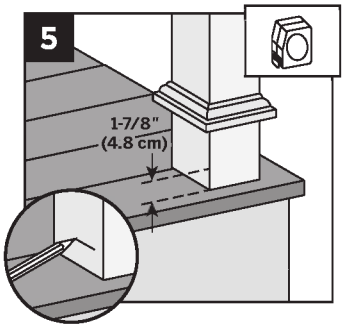

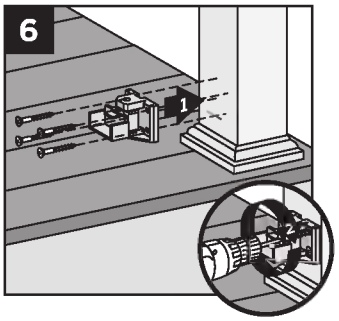

5. Measure 1-7/8" (4.8 cm) up from deck surface to bottom of bracket. Slide skirt up to allow for proper measurement, then push skirt back down onto surface of decking **BEFORE ATTACHING BRACKET**. Mark with light line.
6. Center lower bracket on post **above** the marked line and attach using (4) 2" (5.1 cm) wood screws *(provided)*.

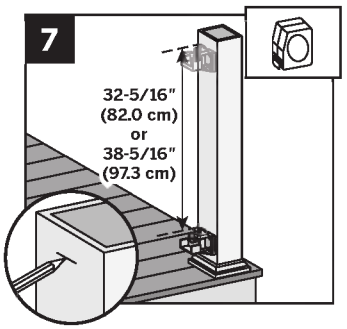

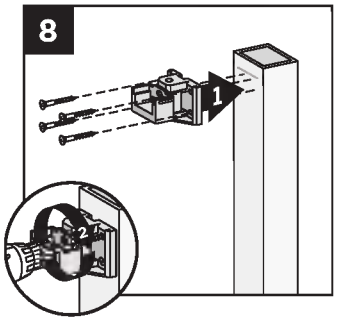

7. Measure up 32-5/16" (82.0 cm) for 36" (91.4 cm) tall railing or 38-5/16" (97.3 cm) for 42" (106.7 cm) tall railing from top of lower rail bracket. Mark with a light line.
8. Center upper bracket on post **below** marked line and attach using (4) 2" (5.1 cm) wood screws *(provided)*.

HOW TO INSTALL HORIZONTAL SWIVEL RAILING
TREX REVEAL®

NOTES:

- ***» WHEN USING REVEAL HORIZONTAL SWIVEL BRACKETS BOTH BOTTOM AND TOP RAILS WILL NEED TO BE MEASURED AND CUT TO APPROPRIATE LENGTHS.***
- ***» HORIZONTAL SWIVEL BRACKETS CAN BE USED UP TO A 50° ANGLE FOR REVEAL RAILINGS.***
- ***» WHEN USING HORIZONTAL SWIVEL BRACKETS VERY IMPORTANT TO LAY OUT LOCATION AND ORIENTATION OF POSTS AND SWIVEL BRACKETS BEFORE INSTALLING SWIVEL BRACKETS.***
- ***» WHEN RAILINGS ARE CUT TO ODD SPANS, ALL SPANS GREATER THAN 5' (1.52 M) (EXAMPLE: 8' (2.44 M) SPAN CUT INTO ONE 5' (1.52 M) SPAN AND ONE 3' (0.91 M) SPAN) WOULD REQUIRE FOOT BLOCK UNDER 5' (1.52 M) SPAN SINCE SMALLER FIXED BALUSTER IS NO LONGER CENTERED).***

How to Measure and Cut Bottom and Top Railings

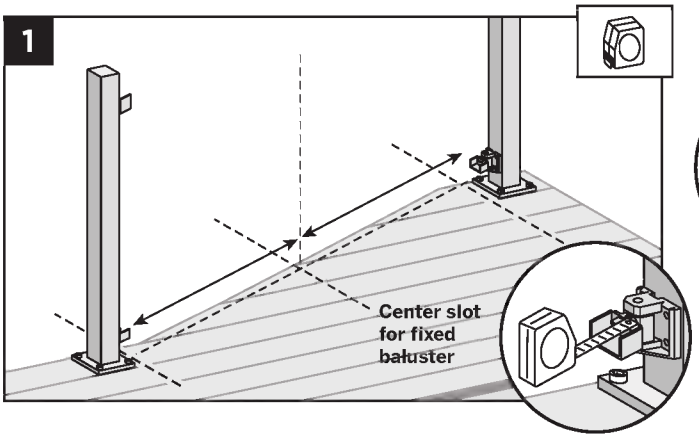

1. With brackets in correct swivel location, measure distance from inside of bracket to inside of bracket. ENSURE THAT BEFORE CUTTING, BALUSTERS HOLES ON BOTH BOTTOM AND TOP RAIL LINE UP, ALSO MAKING SURE CENTER BALUSTER SLOT IS AS CLOSE TO THE MIDDLE OF THE SPAN AS POSSIBLE. In some cases due to odd railing spans, the center baluster may need to be offset in one direction to ensure there is enough room at both post locations for balusters to be placed.

Cutting Bottom Rail and Bottom Rail Cover

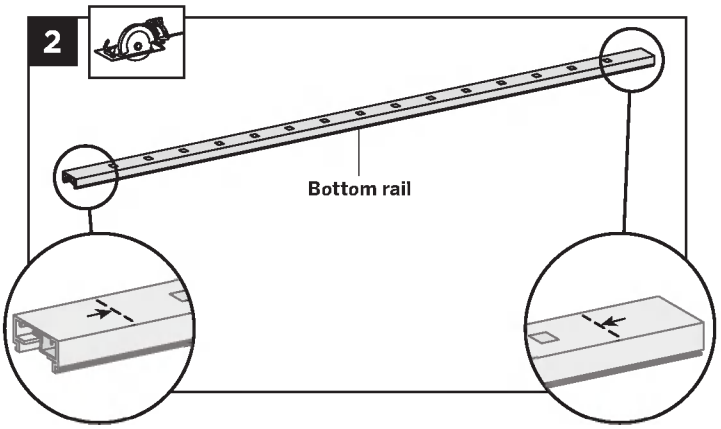

2. Cut bottom rail to the measurement between the bottom swivel brackets

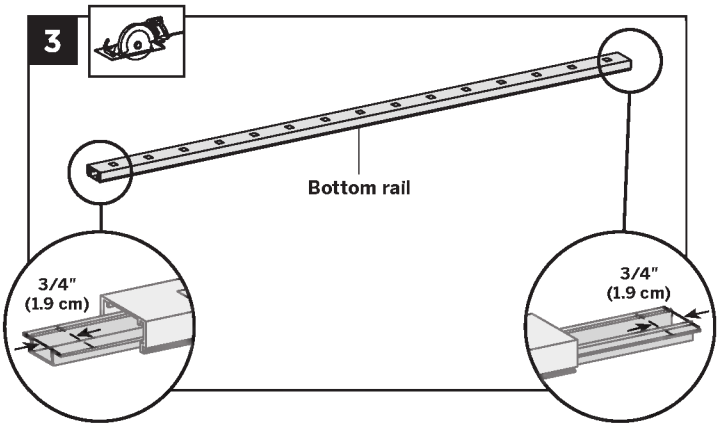

3. Slide rail insert out and cut 3/4" (1.9 cm) **FROM EACH SIDE** of insert, then slide back inside rail and center.
4. Mark and cut bottom rail cover 1-1/2" (3.8 cm) shorter than bottom rail.

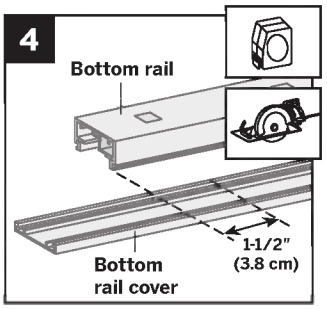

Cutting Top Rail
Option 1:
For Post-to-Post Configuration

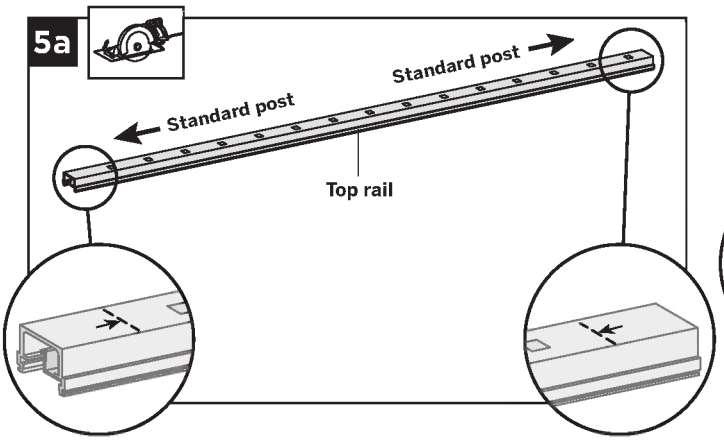

5a. Cut top rail to the measurement between the top swivel brackets. For standard post to standard post configurations this would be same dimensions as that of the bottom rail.

Cutting Top Rail
Option 2:
For Post-to-Crossover-Post Configuration

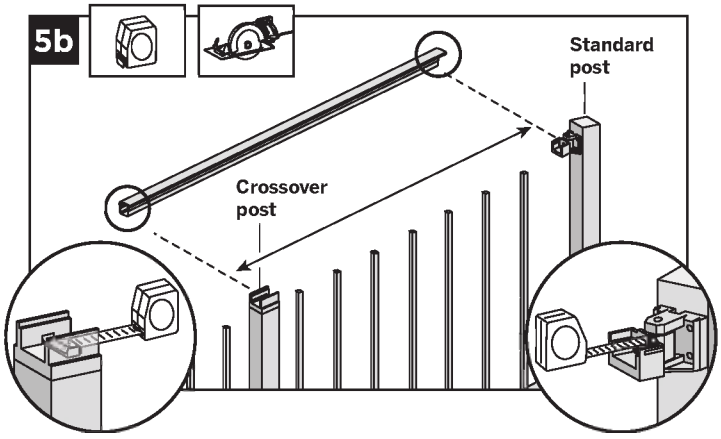

5b. When going from standard post to crossover post, measurement must be taken from inside of top horizontal swivel bracket to inside lip of crossover bracket (which is attached to top of crossover post).

Cutting Top Rail Insert and Cover

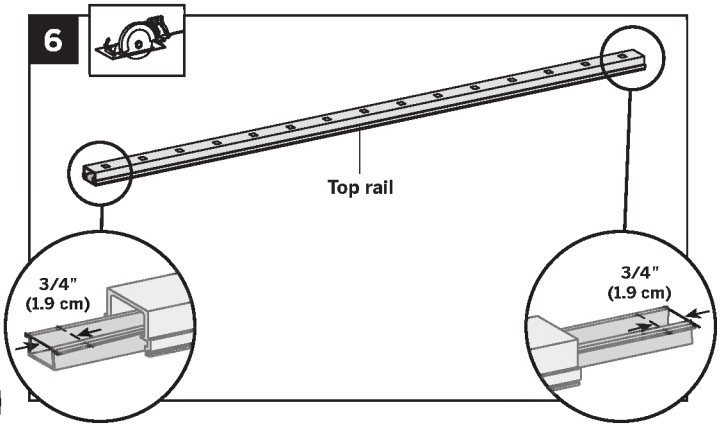

6. Slide rail insert out and cut 3/4" (1.9 cm) **FROM EACH SIDE** of insert, then slide back inside rail and center.
7. Mark and cut top rail cover same length as top rail for all top rail configurations.

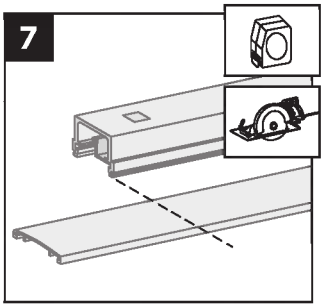

8. **Attaching Center Baluster to Bottom Rail**
   See instructions on page 89.
9. **Attaching Bottom Rail Cover and Bottom Rail to Brackets**
   See instructions on page 89.
10. **Installing Remaining Balusters into Bottom Rail**
    See instructions on page 89.
11. **Attaching Upper Railings**
    See instructions on page 90.
12. **Attaching Bracket Covers, Skirts, and Caps**
    See instructions on page 90.
13. **Attaching Foot Block (Required ONLY for All Clear Span Applications Over 6 ' [1.83 m])**
    See instructions on page 90.

HOW TO INSTALL FOOT BLOCKS – HORIZONTAL RAILING
TREX REVEAL®

Attaching of Foot Block (Required ONLY for All Clear Span Applications Over 6 ' [1.83 m])

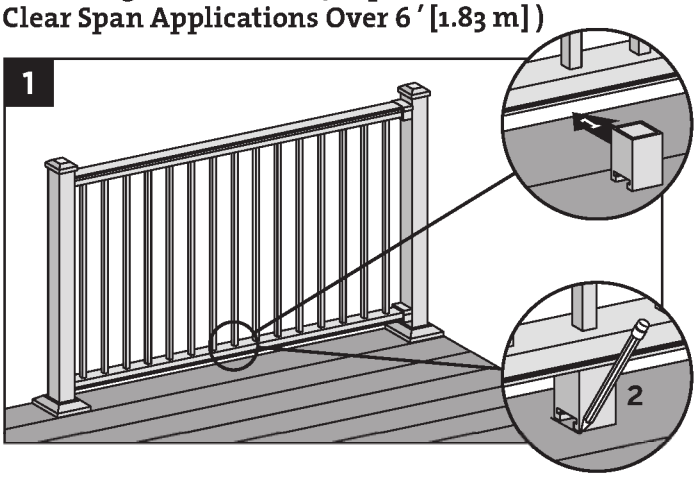

1. To ensure correct location, place foot block under center of bottom rail. Mark to provide placement location of base.
2. Place base (smaller side facing down) on decking surface. Attach base of foot block using (1) screw at an angle through base and into decking.

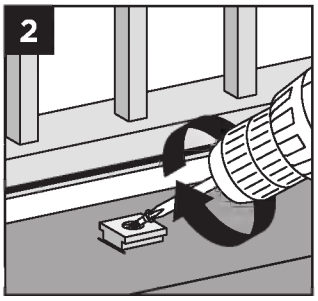

NOTE: Pre-drilling is recommended (1/8" [0.32 cm] drill bit) for attachment of base.

3. After attached, use a **rubber mallet along with scrap piece of wood** to tap foot block until it locks into place.

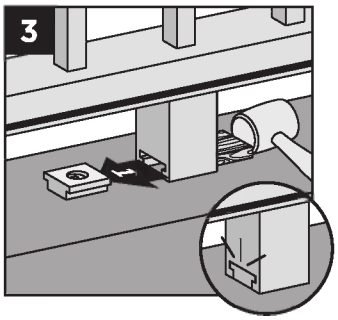

HOW TO INSTALL REVEAL STAIR POSTS AND STAIR RAILING
TREX REVEAL®

IMPORTANT NOTES:

- ***» ALL REVEAL STAIR INSTALLATIONS REQUIRE THE USE OF 53" (134.6 CM) STAIR POST, MEASURED AND CUT TO APPROPRIATE LENGTH IF REQUIRED.***
- ***» IF CROSSOVER STAIR POST IS REQUIRED, USE STAIR POST (AGAIN CUT TO APPROPRIATE LENGTH IF REQUIRED) AND USE SWIVEL CROSSOVER BRACKET.***
- ***» REVEAL STAIR FIXED BRACKETS ARE DESIGNED TO WORK ONLY WITH STAIR SLOPES OF 32°-37°.***
- ***» FOR SMALLER (LESS THAN 32°) OR LARGER ANGLES (GREATER THAN 37°) USE THE REVEAL STAIR SWIVEL BRACKETS.***
- ***» REVEAL COMPOUND SWIVEL STAIR BRACKETS ARE DESIGNED FOR FLARED STAIR DESIGNS.***
- ***» IF INSTALLING STAIR RAILINGS AT EXACT SPAN LENGTHS OF 6' (1.8 M) OR 8' (2.4 M)AND USING POST TO POST CONFIGURATION, THE BOTTOM STAIR RAIL WILL NOT NEED TO BE CUT*, BUT THE TOP STAIR RAIL WILL NEED TO BE MEASURED (MAKING SURE BALUSTERS LINE UP VERTICALLY) AND CUT.***
- ***» IF INSTALLING STAIR RAILINGS AT EXACT SPAN LENGTHS OF 6' (1.8 M) OR 8' (2.4 M), AND USING CROSSOVER POST CONFIGURATION (SPANS FROM ONE CROSSOVER POST TO ANOTHER CROSSOVER POST), BOTH THE BOTTOM AND TOP STAIR RAILS WILL NOT NEED TO BE CUT* IF THE ANGLE IS APPROXIMATELY 34°.***
- ***» AT ALL FINAL END POST CONFIGURATIONS, TOP STAIR RAIL WILL NEED TO BE MEASURED (MAKING SURE BALUSTERS LINE UP VERTICALLY) AND CUT.***
- ***» FOR ODD SPAN LENGTHS, BOTH BOTTOM AND TOP STAIR RAILS WILL NEED TO BE MEASURED (MAKING SURE BALUSTERS LINE UP VERTICALLY) AND CUT. ALSO ENSURE THAT BALUSTERS ARE SPACED WITH EQUAL DISTANCE ON EACH SIDE OF THE POST.***

** Rails that do not require cutting must be oriented in the correct direction to ensure balusters are spaced properly when installed in brackets. On both bottom and top stair railings. baluster hole closest to the end of the each stair rail is to be installed at the top of the stair section. Ensure that both bottom and top rails are correct and balusters line up vertically before installing.*

Installing Standard Reveal Stair Posts, Reveal Stair Crossover Posts, or Pressure-Treated Post, Post Sleeves, and Skirts

1. Make sure 53" (135.6 cm) posts are used for all stair posts.
2. If Reveal stair posts are used, install at nose of stair tread directly under required blocking. *See Reveal horizontal post instructions on page 86 for details.*

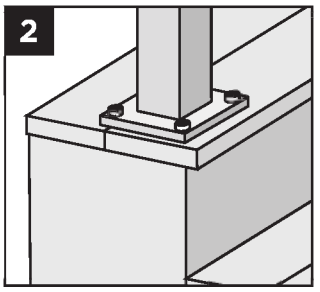

3. If pressure-treated post/post sleeves are used, posts are to be installed to the inside of the last stair stringer (rails must be over decking surface). *See pressure-treated post instructions on page 86 for details.*

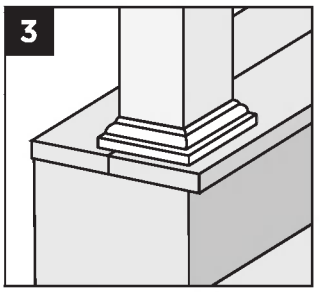

ATTACHING STAIR BRACKETS (FIXED STAIR, STAIR SWIVEL, AND COMPOUND SWIVEL) TO REVEAL POSTS AND PRESSURE-TREATED POST AND POST SLEEVES

TREX REVEAL®

NOTES:

- ***All Reveal fixed stair brackets work ONLY with stair slopes of 32°-37°.***
- ***Illustrations shown are representations when using Reveal post, but same rules apply if using pressure-treated posts and post sleeves.***
- ***Use a clamp to help hold stair brackets in place while fastening with screws.***
- ***IMPORTANT NOTE: BEFORE ATTACHING ANY UPPER BRACKETS MAKE SURE PROPER RAILING HEIGHTS ARE ACHIEVED. RAILING HEIGHTS AND UPPER BRACKET HEIGHTS MAY NEED TO BE ADJUSTED, HOWEVER, DO NOT REDUCE HEIGHTS BASED ON YOUR RAILING CODE REQUIREMENTS. MEASURE CAREFULLY as dimension heights listed below may need to be adjusted!***

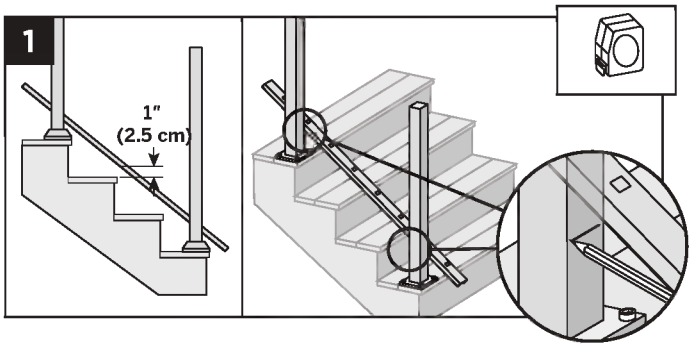

1. Lay bottom stair rail on steps beside posts. Position bottom rail at least 1" (2.5 cm) above nose of stair tread.

TIP: Use a 1" (2.5 cm) deck board as a spacer board and clamp rails to post) and mark where lower brackets are to be attached to both posts. Mark at underside of railing location.

Installing Lower Fixed Stair Brackets

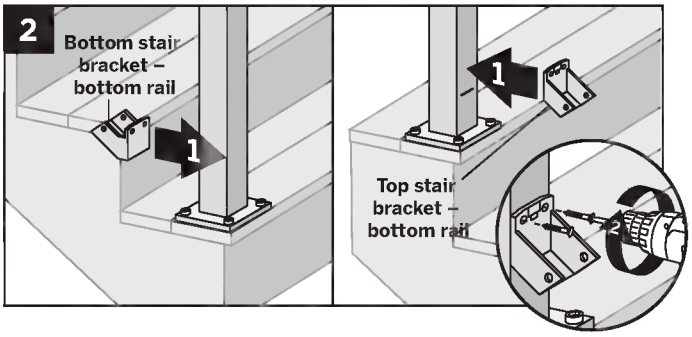

2. Center lower stair bracket on post above the marked line and attach using (2) self-tapping screws *(provided)*. In some cases it may be difficult to attach the stair bracket on the lower stair post. Recommend using a 90° cordless drill in this area if possible to attach screws.

Installing Lower Stair Swivel and Compound Swivel Brackets

NOTE: Picture reflects lower stair swivel bracket.

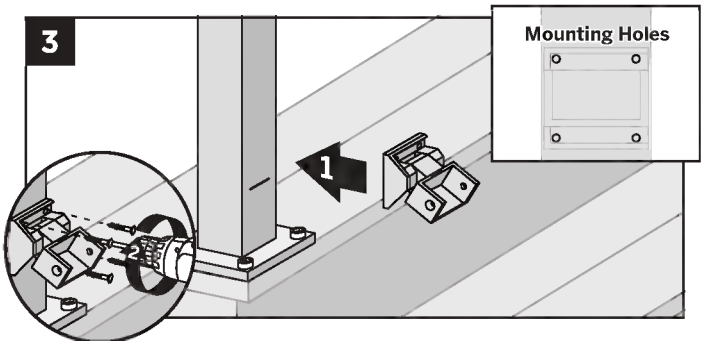

3. Center lower stair swivel bracket on post above the marked line and attach using (4) self-tapping screws *(provided)*. In some cases it may be difficult to attach the stair bracket on the lower stair post. Recommend using a 90° cordless drill in this area if possible to attach screws.

ATTACHING STAIR BRACKETS (FIXED STAIR, STAIR SWIVEL, AND COMPOUND SWIVEL) TO REVEAL POSTS AND PRESSURE-TREATED POST AND POST SLEEVES/CONTINUED

TREX REVEAL®

Installing Upper Fixed Stair Brackets

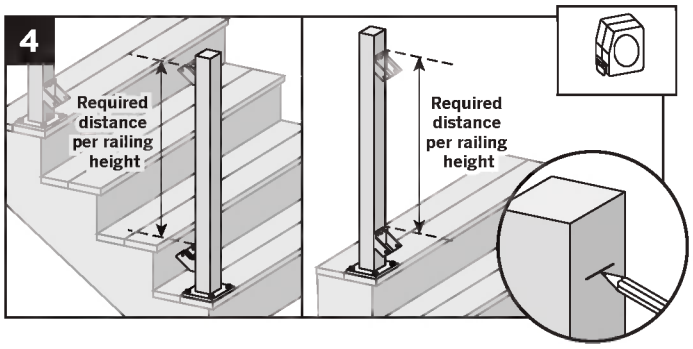

4. ***SEE IMPORTANT NOTE ON PAGE 97 IN REGARDS TO MEASUREMENTS BEFORE ATTACHING BRACKET.*** Measure up required dimension for 36" (91.4 cm) tall railing or 42" (106.7 cm) tall railing from top of lower stair rail fixed bracket. Mark with light line.

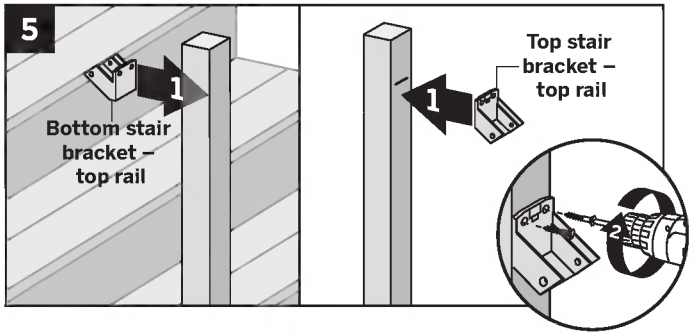

5. Center upper stair fixed bracket on post **below** the marked line and attach using (2) self-tapping screws *(provided)*.

Installing Upper Stair Swivel And Compound Swivel Brackets

6. ***SEE IMPORTANT NOTE ON PAGE 97 IN REGARDS TO MEASUREMENTS BEFORE ATTACHING BRACKET.*** Measure up required dimension for 36" (91.4 cm) tall railing or for 42" (106.7 cm) tall railing, from top of lower stair rail swivel bracket. Mark with light line.

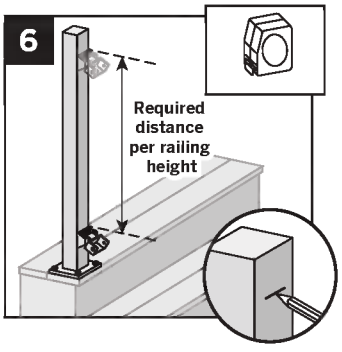

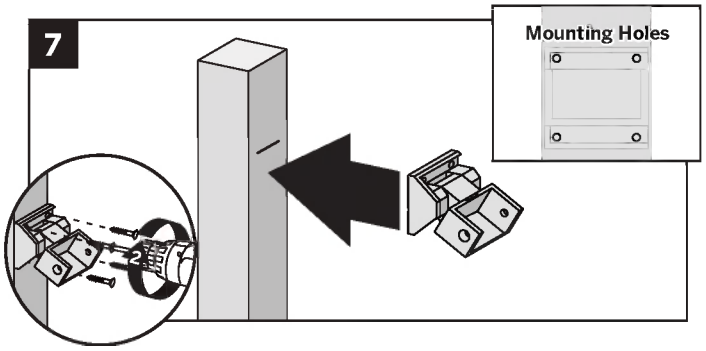

7. Center upper stair swivel bracket on post **below** the marked line and attach using (4) self-tapping screws *(provided)*.

NOTE: Upper bracket is not required on crossover post configurations.

How to Measure Bottom Stair Railings (WHEN REQUIRED)

When Using Fixed Stair Brackets:

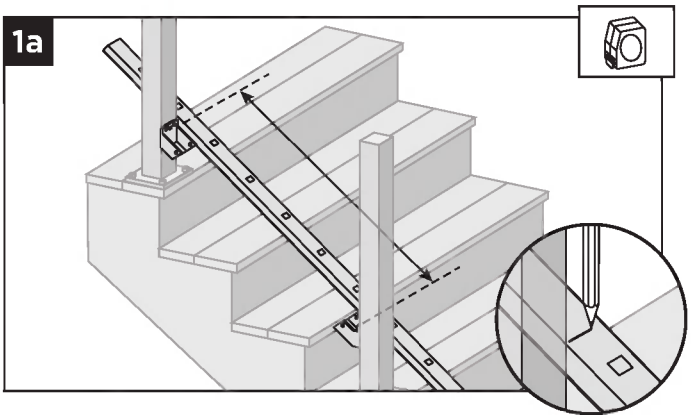

1a. Position bottom stair rail along the nose of the stair treads. Ensure that before cutting, balusters holes are centered in between the posts and also allow for clearance for attachment to brackets. Mark bottom stair rail at each intersection.

ATTACHING STAIR BRACKETS (FIXED STAIR, STAIR SWIVEL, AND COMPOUND SWIVEL) TO REVEAL POSTS AND PRESSURE-TREATED POST AND POST SLEEVES/CONTINUED

TREX REVEAL®

When using Stair Swivel and Compound Swivel Brackets:

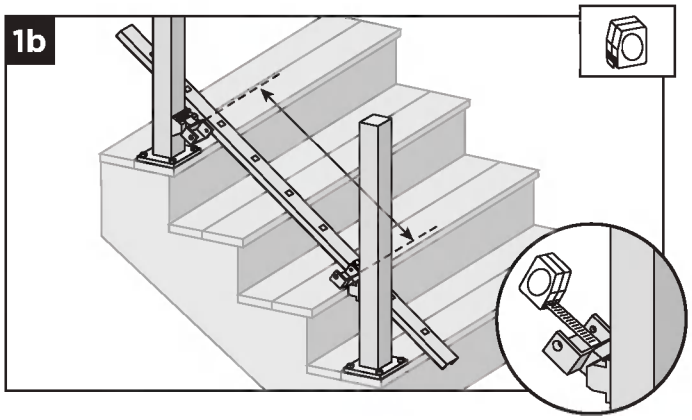

1b. With brackets in correct swivel locations, measure distance from inside of swivel bracket to inside of swivel bracket. Ensure that before cutting, balusters holes are parallel and centered in between the posts and also allow for clearance for attachment to brackets. Mark bottom stair rail at each intersection.

When using Stair Swivel or Compound Swivel Brackets:

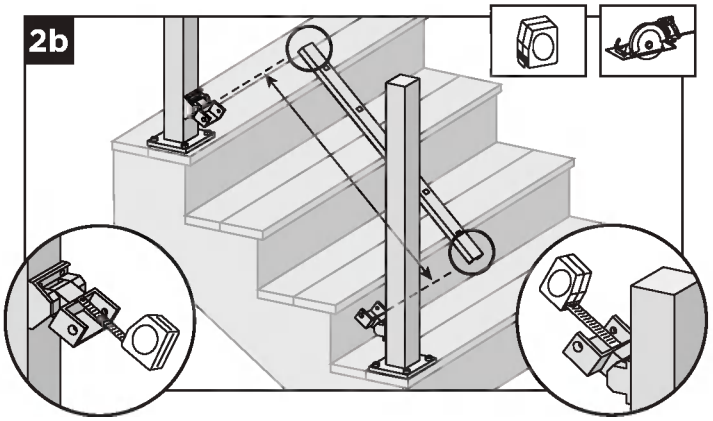

2b. Cut each end of the bottom rail, rail insert, and bottom rail cover at the mark on each end to allow for fit into bottom stair rail brackets.

NOTE: Railing does not need to be cut at angle, brackets are designed to allow for railing to be installed with standard straight cut.

Cutting Bottom Stair Rail, Bottom Stair Rail Cover, and Attachment of Bottom Stair Rail Cover

When using Fixed Stair Brackets:

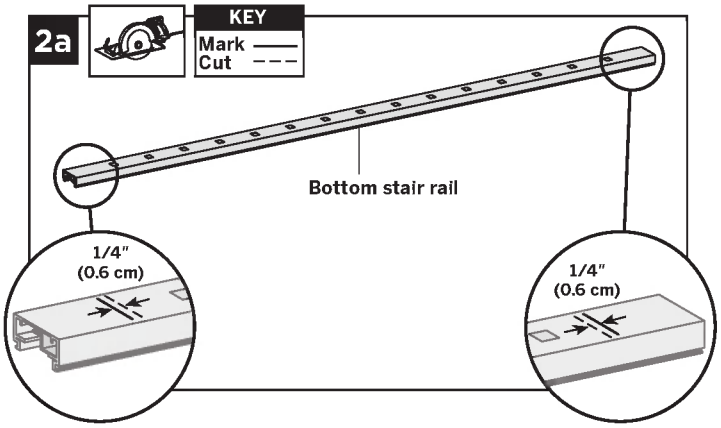

2a. Cut each end of the bottom stair rail, rail insert, and bottom rail cover 1/4" (0.6 cm) shorter than the mark on each end to allow for fit into bottom stair rail brackets.

NOTE: Railing does not need to be cut at angle, brackets are designed to allow for railing to be installed with standard straight cut.

Attachment of Bottom Stair Rail Cover and Bottom Stair Rail to Brackets

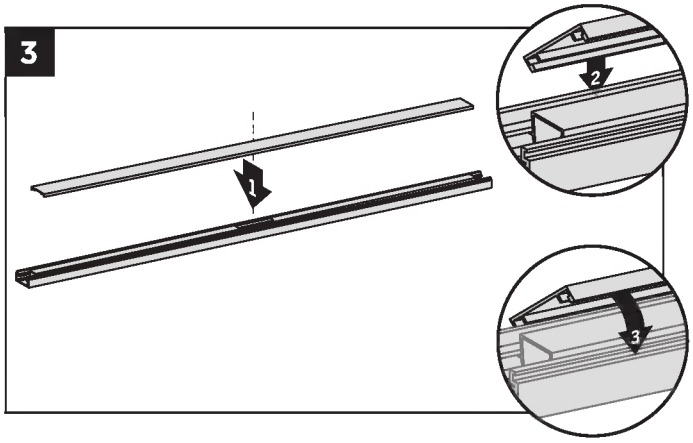

3. Attach "flat" bottom stair rail cover to bottom stair rail. Align cover on one side of the bottom rail in slot on side of rail. Then starting from one end of rail snap cover onto opposing slot working down the length of the rail. In some cases, a **rubber mallet** may facilitate the fastening using **GENTLE** tapping.

ATTACHING STAIR BRACKETS (FIXED STAIR, STAIR SWIVEL, AND COMPOUND SWIVEL) TO REVEAL POSTS AND PRESSURE-TREATED POST AND POST SLEEVES/CONTINUED

TREX REVEAL®

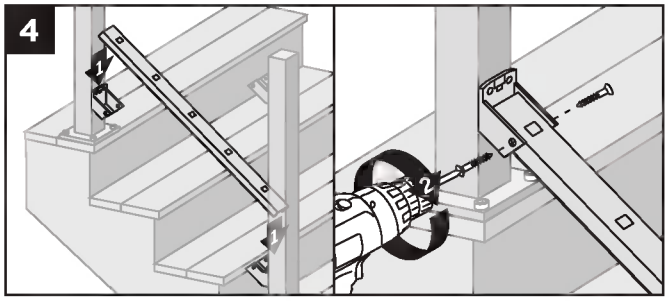

4. Set bottom stair rail into bottom stair rail brackets. Attach bottom stair rail to bottom stair bracket using (2) self-tapping screws *(provided)* on each side of bracket.

How to Measure Top Stair Railings: (WHEN REQUIRED)

IMPORTANT NOTE: BEFORE CUTTING ANY TOP RAILS MAKE SURE THAT WHEN MEASURING ALL BALUSTER HOLES LINE UP PARALLEL!

When Using Fixed Stair Brackets:

5a. Place two balusters into lower rail at each end closest to post.

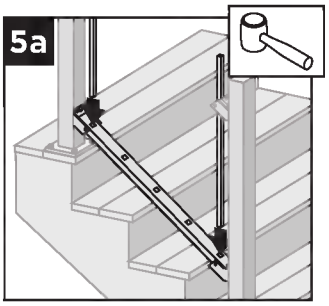

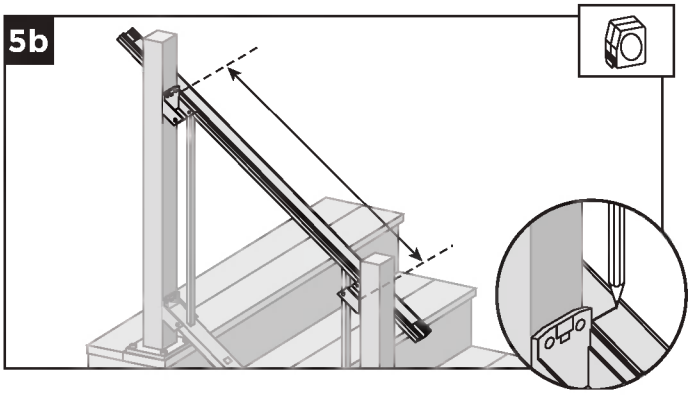

5b. Position top rail onto balusters (position to side of post) and ENSURE that balusters are parallel with post. Mark top stair rail at each intersection.

When using Stair Swivel and Compound Swivel Brackets:

5c. Place two balusters into lower rail at each end closest to post.

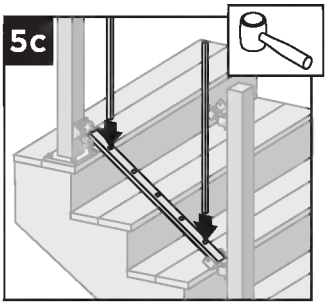

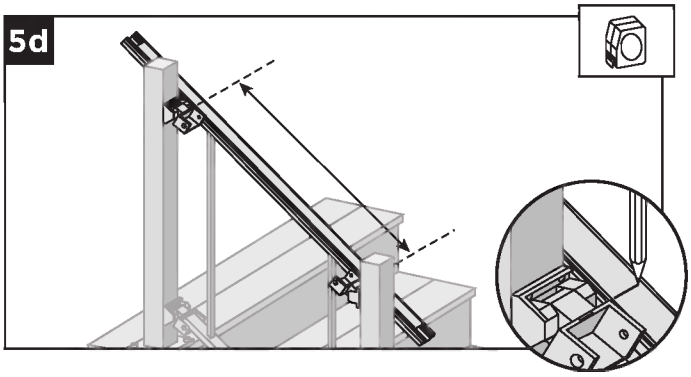

5d. Position top rail onto balusters (position to side of post) and ENSURE that balusters are parallel with post. With brackets in correct swivel location, measure distance from inside of swivel bracket to inside of swivel bracket. Mark top stair rail at each intersection.

ATTACHING STAIR BRACKETS (FIXED STAIR, STAIR SWIVEL, AND COMPOUND SWIVEL) TO REVEAL POSTS AND PRESSURE-TREATED POST AND POST SLEEVES/CONTINUED

TREX REVEAL®

Cutting Top Stair Rail and Rail Insert
Option 1:
For Stair-Post-to-Stair-Post Configuration

When Using Fixed Stair Brackets:

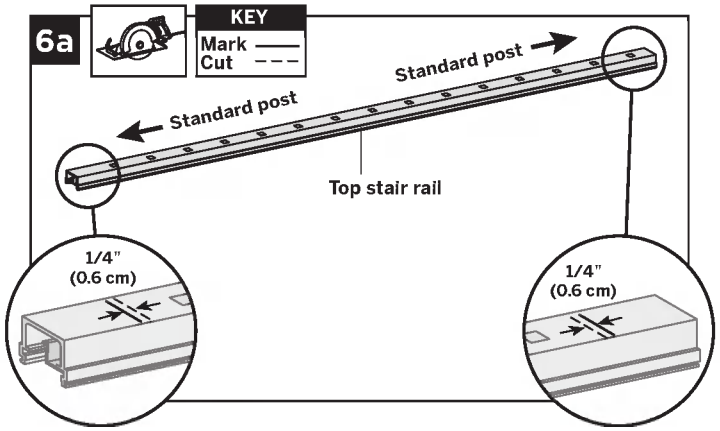

6a. Cut each end of top stair rail along with rail insert 1/4" (0.6 cm) shorter than mark to allow for fit into top stair rail bracket.

NOTE: Railing does not need to be cut at angle, brackets are designed to allow for railing to be installed with standard straight cut.

When using Upper Stair Swivel and Compound Swivel Brackets:

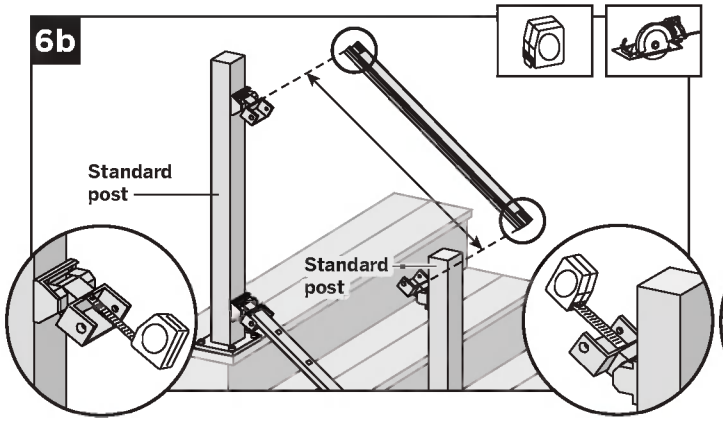

6b. Cut top rail along with rail insert to the measurement between the top stair swivel brackets. For standard post to standard post configurations this would be same dimensions as that of the bottom stair rail.

Cutting Top Stair Rail and Insert
Option 2:
For Stair-Post-to-Stair-Crossover-Post Configuration

When Using Fixed Stair Brackets:

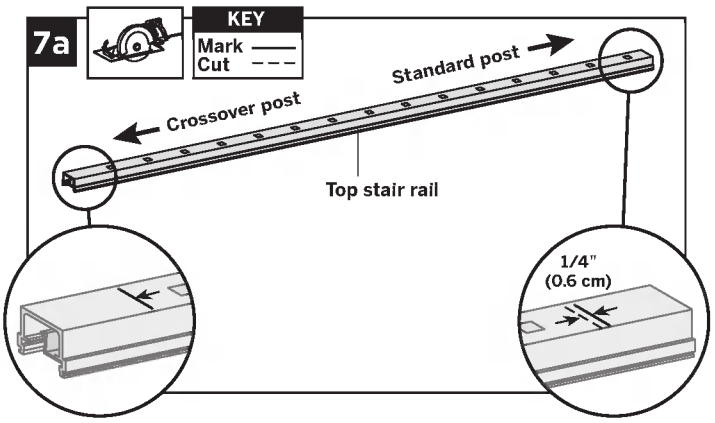

7a. Top stair rail along with rail insert must be cut differently on each side of the rail. Railing side that attaches to standard post should be cut 1/4" (0.6 cm) shorter than the mark to allow for fit into top rail bracket. Railing side that attaches to the crossover post should be cut directly on the mark to allow for fit into the crossover post bracket.

When using Upper Stair Swivel and Compound Swivel Brackets:

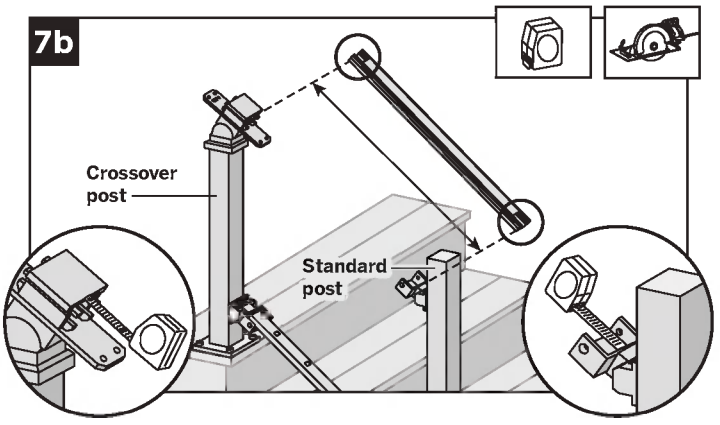

7b. When going from standard stair post to stair crossover post, measurement must be taken from inside of top horizontal stair swivel bracket to inside lip of stair crossover bracket (crossover post will need to be modified to have swivel crossover bracket installed).

ATTACHING STAIR BRACKETS (FIXED STAIR, STAIR SWIVEL, AND COMPOUND SWIVEL) TO REVEAL POSTS AND PRESSURE-TREATED POST AND POST SLEEVES/CONTINUED

TREX REVEAL®

Cutting Top Stair Rail and Rail Insert Option 3:
For Stair-Crossover-Post-to-Stair-Crossover-Post Configuration

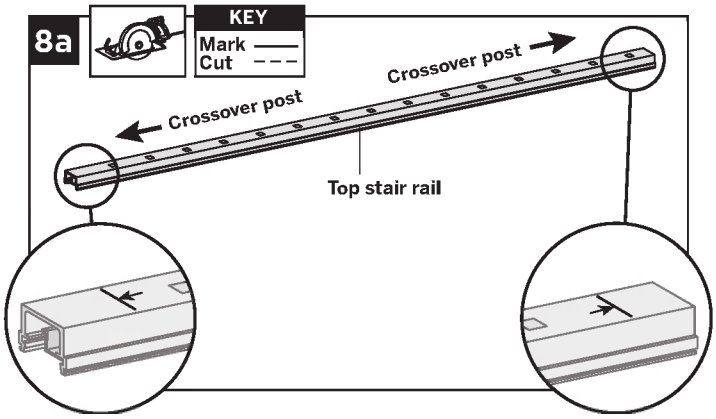

8a. Cut each end of the top stair rail along with rail insert on the mark line to allow for fit into the crossover post bracket on each side.

Cutting Top Stair Rail Cover, and Attachment of Top Stair Rail Cover

9. Mark and cut top rail cover same length as top rail for all top rail configurations.

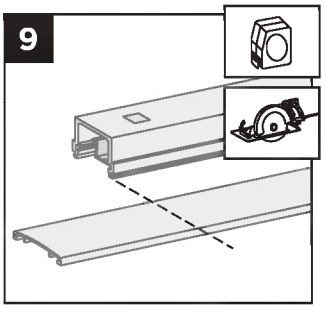

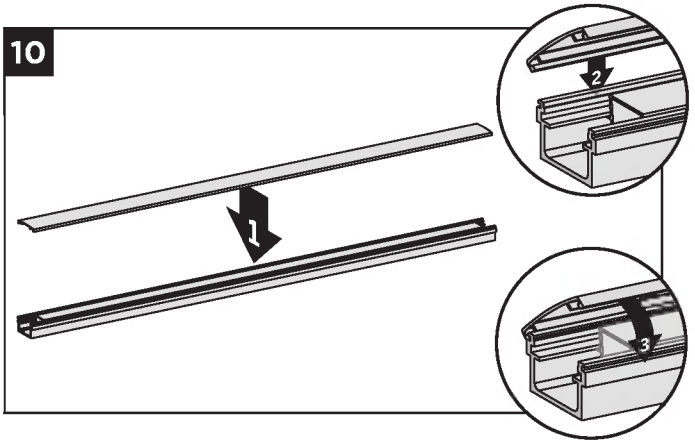

10. Attach "crowned" upper stair rail cover to upper stair rail by aligning cover on one side of rail. Then starting from one end of stair rail, snap cover onto opposing slot working down length of stair rail. A **rubber mallet** may facilitate the fastening using **GENTLE** tapping.

Installing Balusters into Bottom Stair Rail

11. Place balusters into holes in lower stair rail by snapping fully into place. In some cases, a **rubber mallet** may facilitate the fastening using **GENTLE** tapping.

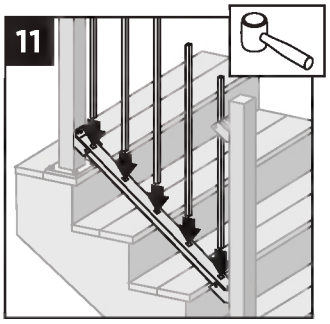

ATTACHING STAIR BRACKETS (FIXED STAIR, STAIR SWIVEL, AND COMPOUND SWIVEL) TO REVEAL POSTS AND PRESSURE-TREATED POST AND POST SLEEVES/CONTINUED

TREX REVEAL®

Attaching Upper Stair Rails

12. Working from one end of upper stair rail, snap balusters into upper stair rail working down length of rail.

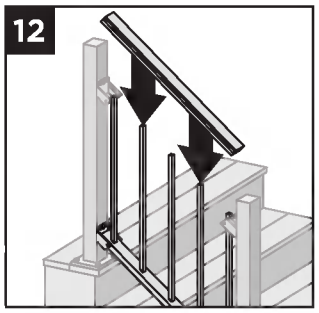

13a. For stair post-to-post configuration, attach top stair rail to top stair bracket (all types) using (2) self-tapping screws *(provided)* on each side of stair bracket.

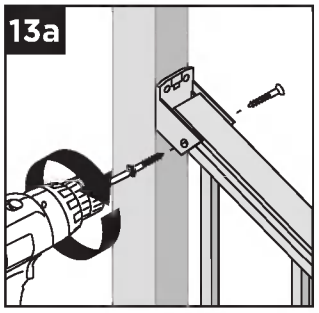

13b. For stair crossover post configuration, fasten upper stair rail to swivel crossover post bracket by installing screws diagonally through crossover stair bracket into upper rail using (2) self-tapping screws *(provided)* on each side.

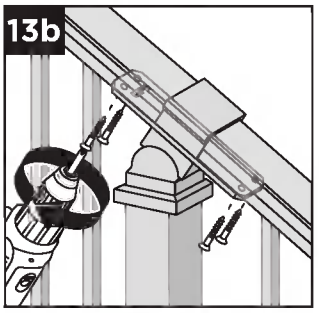

NOTE: Pre-drilling is recommended (7/64" [0.28 cm] drill bit) for attaching stair railing to stair bracket.

Attaching of Stair Bracket Covers, Skirts, and Caps

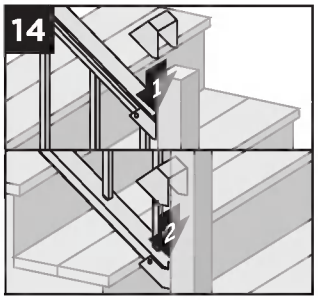

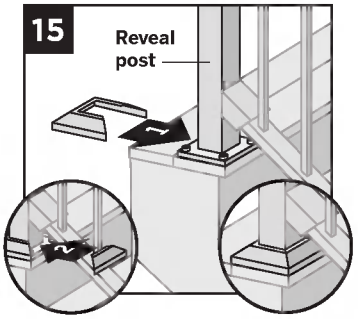

14. Attach corresponding bracket covers over opening in upper and bottom rails.
15. Attach provided post skirt to bottom of posts when using Reveal posts.

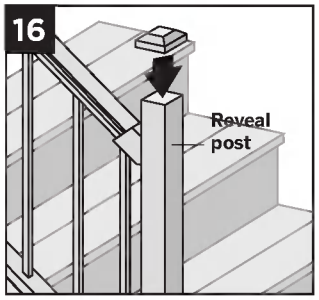

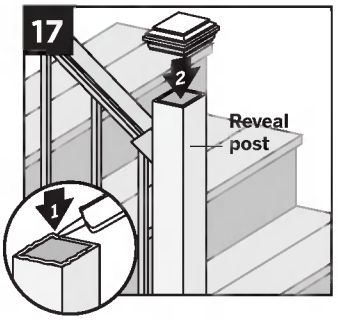

16. Attach post caps to Reveal posts (use of **rubber mallet** may be required for secure attachment).
17. Attach post caps to post sleeves using external grade PVC construction adhesive.

TREX SELECT® RAILING

NOTES:

» All Trex Select Railing lengths are manufactured at ON CENTER dimensions (spanning from center of each post): 67-5/8" (176.8 cm) for 6' (1.83 m) on center, and 92-5/8" (235.3 cm) for 8' (2.44 m) on center. Note that railings are designed to be slightly longer that required to allow for very slight play in post placement – trimming may be required. IT IS VERY IMPORTANT TO MEASURE FIRST.

PARTS

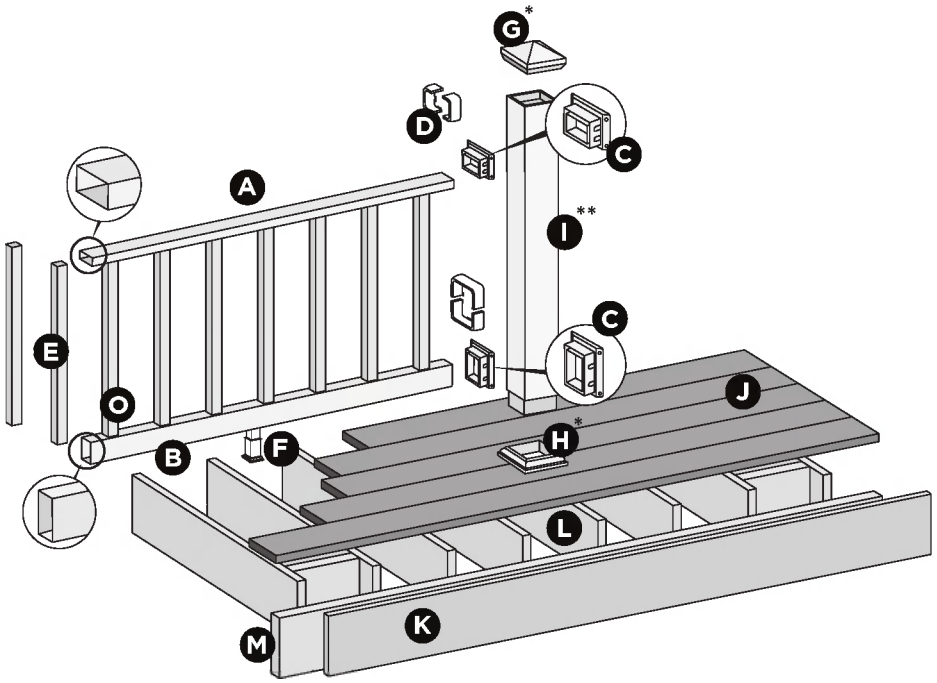

A. Select top rail
B. Select bottom rail
C. Select brackets
D. Select bracket covers
E. Select balusters
F. Adjustable foot block
G. Post sleeve cap*
H. Post sleeve skirt*
I. Post sleeve - 4" x 4" (10.2 cm x 10.2 cm) or 6" x 6" (15.2 cm x 15.2 cm) post sleeve)**
J. Trex decking
K. TrexTrim™ or Trex fascia
L. Code-approved wood joist - 2" x 8" (5.1 cm x 20.3 cm)
M. Code-approved wood rim joist - 2" x 8" (5.1 cm x 20.3 cm) or larger

* *Item not included in the Select railing kits.*
** *Both 4" x 4" (10.2 cm x 10.2 cm) and 6" x 6" (15.2 cm x 15.2 cm) post sleeves are designed to fit over 4" x 4" pressure-treated post.*

NOTE: *If installing 42" (106.7 cm) railing, use longer posts sleeves and measure accordingly to ensure a proper cut (**DO NOT CUT POST SLEEVES TO ACTUAL 42" – THESE NEED TO BE LONGER TO ALLOW FOR POST CAPS TO FIT**).*

NOTE: *Pictorial representations shown may only show one style of railing, while others may also be used. Review detailed instructions to determine what railing styles and combinations can be used.*

DETERMINING BALUSTERS NEEDED		
Baluster Type	**Per 6' OC Section**	**Per 8' OC Section**
(Horizontal Application)	13	18
(Stair Application)	11	15

HOW TO INSTALL TREX SELECT® RAILING
TREX SELECT®

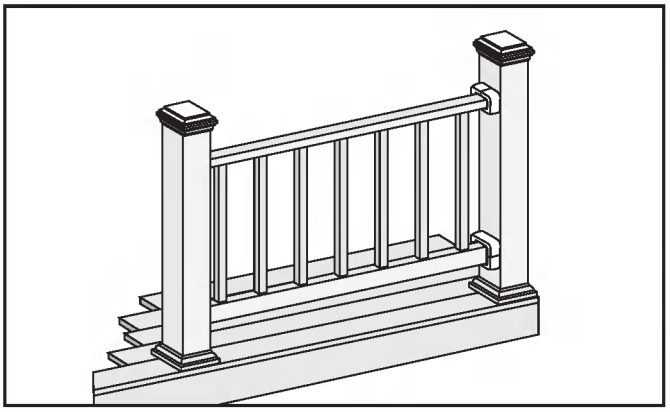

Read all instructions BEFORE installation.
Important: Post sleeves are **NOT** to be cut for this design style.

Installing Pressure-Treated Posts

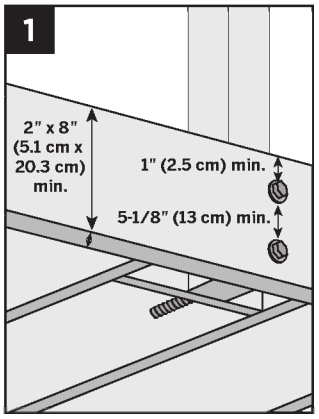

- » **Select Railing Kits are designed for posts to be installed at maximum of 6′ or 8′ (1.8 m or 2.4 m) ON CENTER depending on the length being used. (Note: smaller spans are allowed).**
- » Attach posts using 1/2″ (1.3 cm) carriage bolts.
- » Minimum joist size is 2″ x 8″ (5.1 cm x 20.3 cm).
- » Top bolts must be 1″ (2.5 cm) from tops of joists.
- » Bottom bolts must be 5-1/8″ (13 cm) from top bolts.

NOTE: *Blocking* ***MUST*** *added for extra strength.*

Installing Post Sleeve Skirts and Post Sleeves

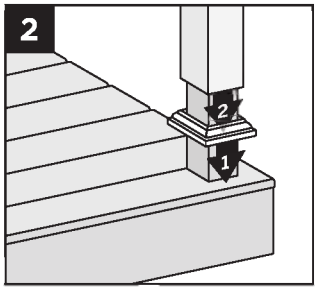

2. Slide post sleeve skirt over post and down to rest on decking surface. Slide post sleeve over post and position inside post sleeve skirt.

NOTE: *Shims can be used to plumb post sleeves.*

Cutting Railings

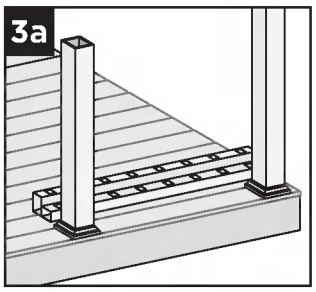

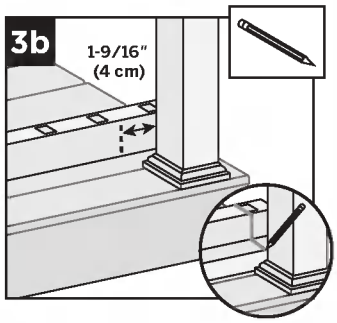

3a. Position bottom and top rails between posts, ensuring baluster holes are lined up and spaced evenly.

3b. Also allow for a minimum of 1-9/16″ (4 cm) on each end of rail for bracket placement AND baluster clearance. Mark rails at intersection of rail and post.

3c. Cut each end of both bottom and top rails 1/4″ (0.6 cm) shorter than mark on each end to allow for fit into brackets.

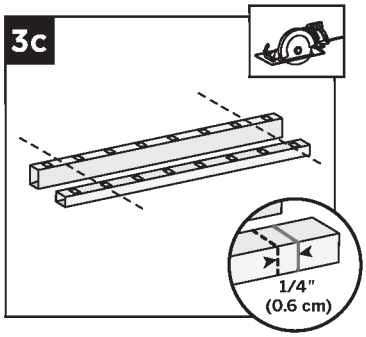

NOTE: *After cutting this still allows enough space for bracket placement.*

Attaching Foot Block to Bottom Railing

NOTE: REFER TO PAGES 112-113 FOR DETAILED INSTRUCTIONS ON INSTALLATION OF FOOT BLOCK (BASIC STEPS SHOWN HERE).

4. Invert the bottom railing. Center foot block on bottom rail and attach. **DO NOT** extend foot block.

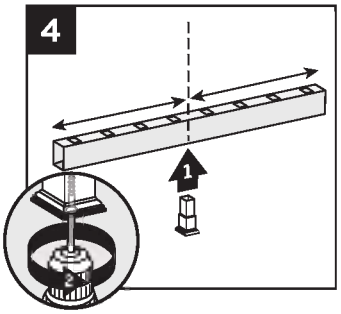

Assembling Railing Section

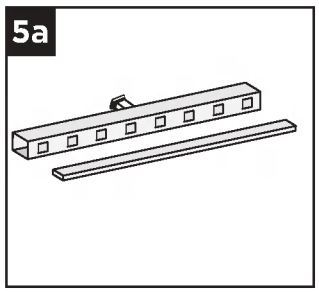

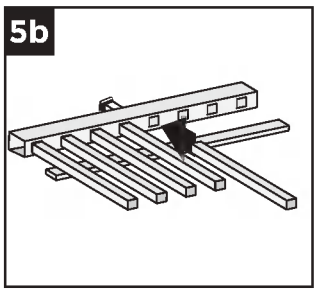

5a. On clean flat surface lay bottom railing on its side. Make sure to allow enough room for installation of balusters and top rail. Place a scrap piece of 1" (2.5 cm) decking board running parallel to bottom rail for support when installing balusters.
5b. Insert balusters into bottom rail slots as far as they will go, allowing the balusters to also rest on the decking board.

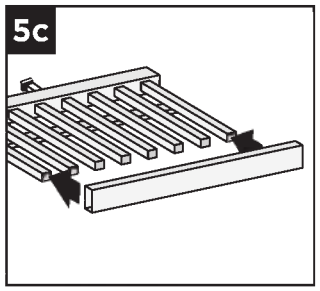

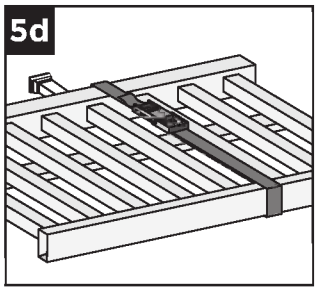

5c. Attach top rail to balusters, feeding each baluster into required slots. Start on one end and work towards the other.
5d. To help temporarily secure the railing section together, place a ratchet strap around the top and bottom rail and tighten until snug. **DO NOT OVERTIGHTEN AS YOU CAN BEND THE RAILING.**

Installing Railing Section to Posts

6a. Using scrap material (i.e. 2 x 4s, decking boards, etc.) cut at least three support blocks at 3-3/4" (9.5 cm) in height. Place one each on decking surface beside each post and one near center of span.

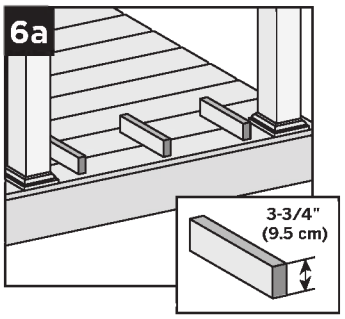

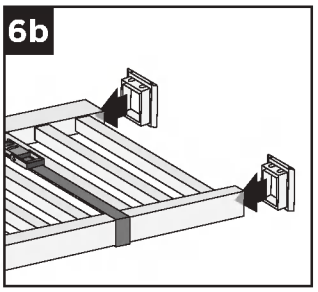

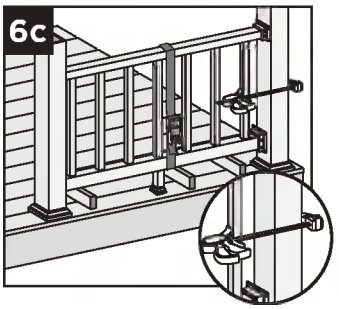

6b. Slide brackets on each end of both top and bottom railing.
6c. Lift secured railing section up, and **CENTER** this section in between the spanned posts on pre-positioned support blocks.

NOTE: *To help stabilize railing section use a quick-grip clamp (or other type of clamp) and clamp the first baluster to post sleeve. (**DO NOT** OVERTIGHTEN CLAMP.)*

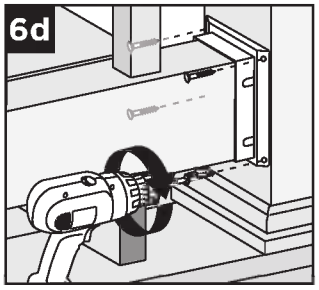

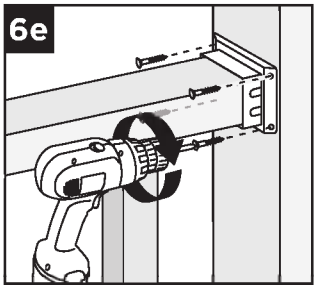

6d. Install bottom bracket (both sides) to post using four #8-10 x 2" (5.1 cm) screws per bracket *(provided)*.
6e. Install top bracket (both sides) to post using four #8-10 x 2" (5.1 cm) screws per bracket *(provided)*.

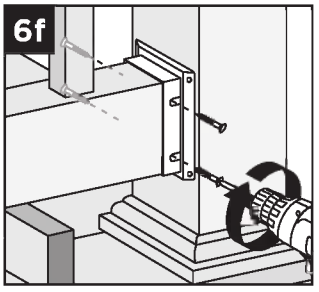

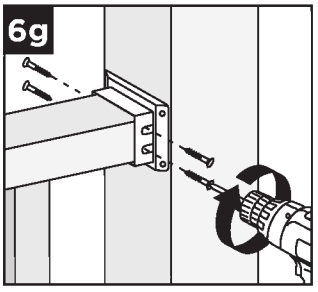

6f. Install bottom bracket (both sides) to railing using four #10 x 1" screws per bracket *(provided)*.
6g. Install top bracket (both sides) to railing using four #10 x 1" screws per bracket *(provided)*.

Attaching Bracket Covers and Post Caps

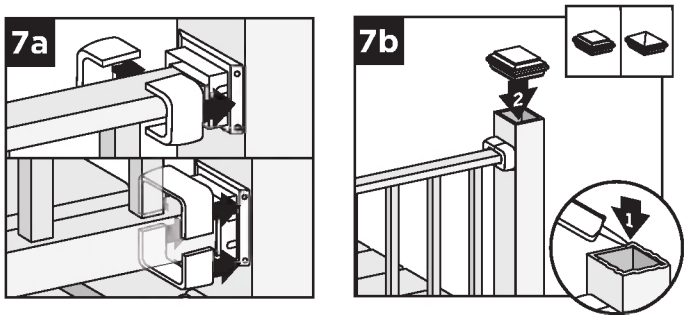

7a. Snap bracket covers over each bracket.
7b. Secure post caps with silicone or PVC adhesive.

NOTE: *Clean-up any excess adhesive before drying.*

HOW TO INSTALL 45 DEGREE ADAPTOR – HORIZONTAL APPLICATIONS ONLY

TREX SELECT®

Read all instructions BEFORE installation.

PARTS

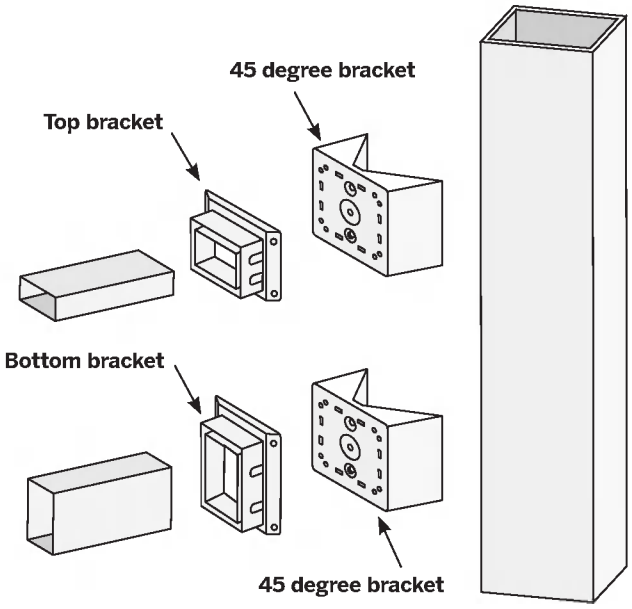

1. Measure, cut, and assemble railing sections as per instructions listed on pages 105-107.

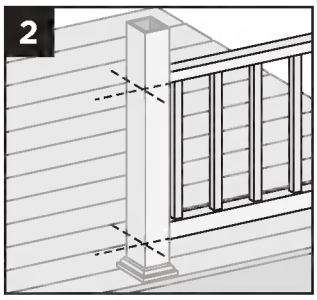

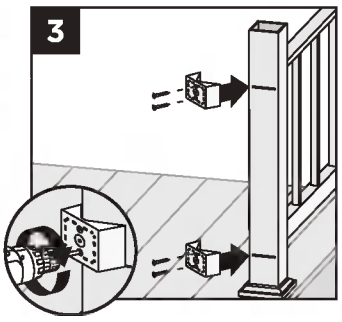

2. Locate placement of railing section so that this lines up with horizontal railing heights.
3. Install 45° angle bracket onto post using provided hardware.
4. Install foot block to bottom railing as stated in previous instructions. *See page 105.*
5. Assemble railing section as stated in previous instructions. *See page 106.*
6. Install railing section to post as stated in previous instructions. *See page 106.* However use longer screws that were provided with adaptor to attach brackets thru adaptor into posts.

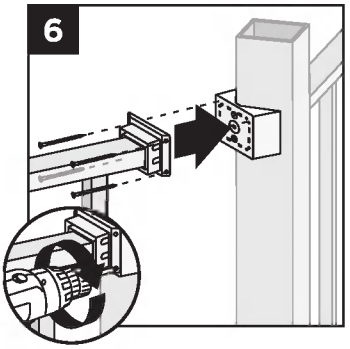

7. Install brackets to railing as stated in previous instructions. *See page 106.*
8. Attach bracket covers and post caps as stated in previous instructions. *See page 107.*

HOW TO INSTALL TREX SELECT® STAIR RAILING
TREX SELECT®

Read all instructions BEFORE installation.

NOTE: *All Select railings work* ***ONLY WITH STAIR SLOPES OF 32°-37°****.*

Installing Posts, Post Sleeve Skirts, and Post Sleeves for Stair Rails

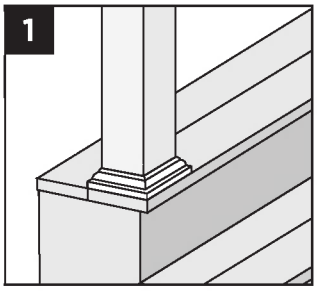

1. Install posts, post sleeve skirts, and post sleeves according to standard Select railing instructions.
   - » In most cases, a post and post sleeve longer than 39″ (99.1 cm) will be needed on the lower section of stair rail to accommodate stair angle.
   - » Make sure top and bottom posts for stairs are installed at nose of each tread.

Measuring and Cutting Railings

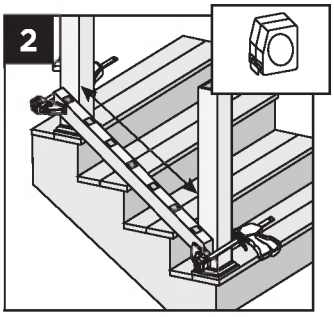

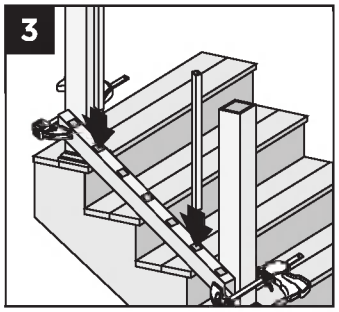

2. Set bottom stair railing along the nose of the stair treads, ensuring the baluster holes are spaced evenly. Also allow for a minimum of 1-9/16″ (1.4 cm) on each end of rail for bracket placement AND baluster clearance. Use clamp to hold bottom stair rail in place.
3. Place two balusters into lower rail at each end closest to post.

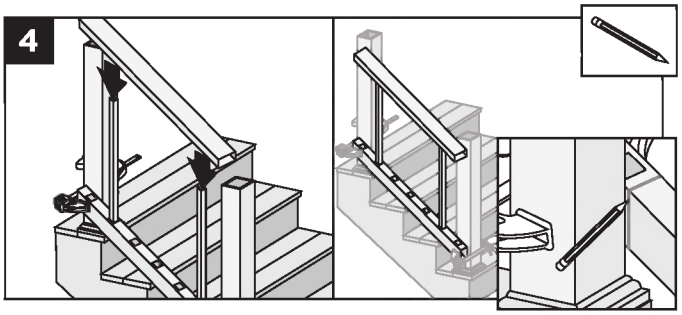

4. Position top rail onto balusters and ENSURE that balusters are parallel with post. Mark both bottom and top stair rail at each intersection. Mark the side of each railing to ensure that proper angle is cut for attachment.
5. Cut each end of both bottom and top stair rails 1/4″ (0.6 cm) shorter than mark on each end to allow for fit into bottom rail brackets.

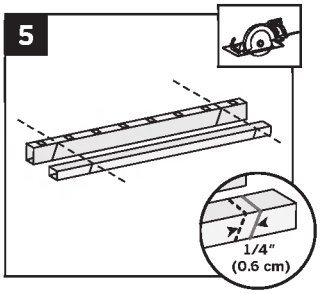

NOTE: *Top rail is shown inverted.*

Cutting Balusters on Angle (OPTIONAL)

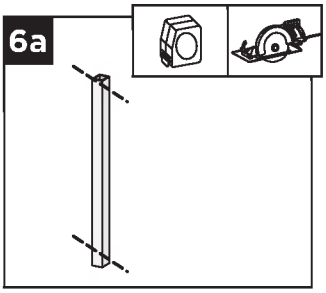

6a. In order for balusters to seat properly (depending on the angle of the stair railing), the balusters may need to be trimmed to match the angle of the bottom and top railing.

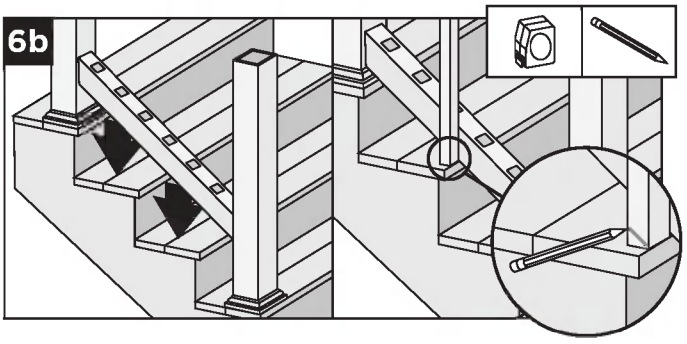

6b. Set bottom railing on nose of stair treads and set baluster at 90° on the outside of the railing, mark and measure the angle.

NOTE: *Measure, mark, and cut a scrap board to ensure you have proper angle* ***BEFORE*** *cutting balusters on angle.*

6c. Cut the **VERY END** of baluster, both top and bottom, making sure that point to point measurement of the baluster remains at either 32" (81.3 cm) for 36" (91.4 cm) rail heights or 38" (96.5 cm) for 42" (106.6 cm) rail heights.

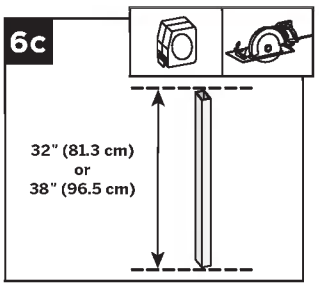

Attaching Foot Block to Bottom Railing

REFER TO PAGE 113 FOR DETAILED INSTRUCTIONS ON INSTALLATION OF FOOT BLOCK FOR STAIRS (BASIC STEPS SHOWN HERE).

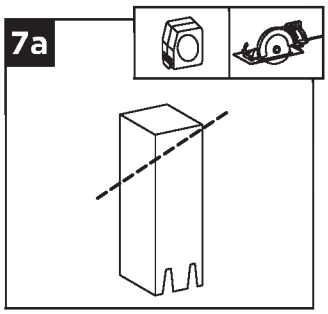

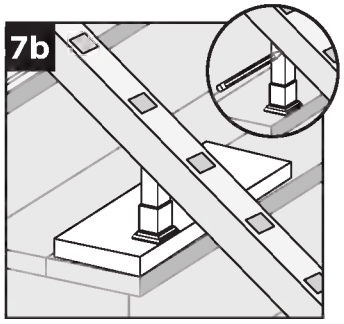

7a. For stair applications, cut the section of foot block at an angle to match rail. *Refer to foot block instructions on pages 112-113 for specific information on how to do this.*

7b. Place scrap deck board at nose of stair tread, and place foot block on top of scrap board near the nose of the tread. Position bottom stair rail on stair tread and mark the underside of the bottom stair rail for location of foot block.

7c. Invert bottom rail. Center foot block on bottom rail and attach at marked position. **DO NOT** extend foot block.

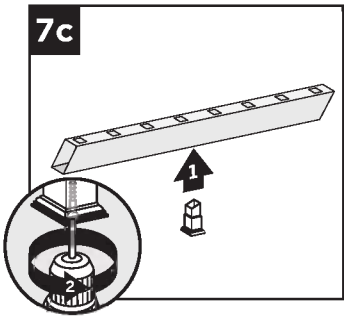

Attachment of Bottom Rail to Post

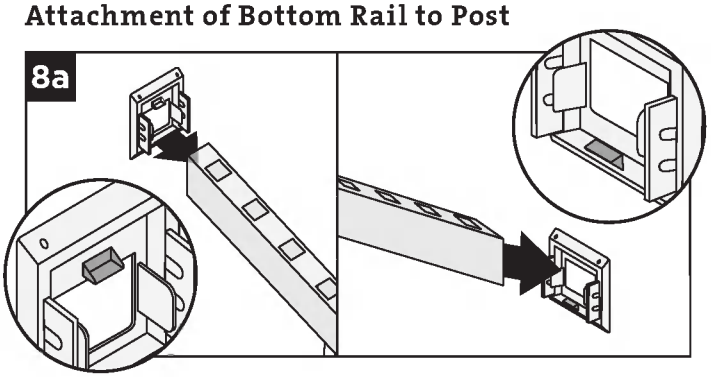

8a. Slide bottom stair brackets on bottom rail on each side. Top bracket must have tab on bracket facing up. Bottom bracket must have tab facing down.

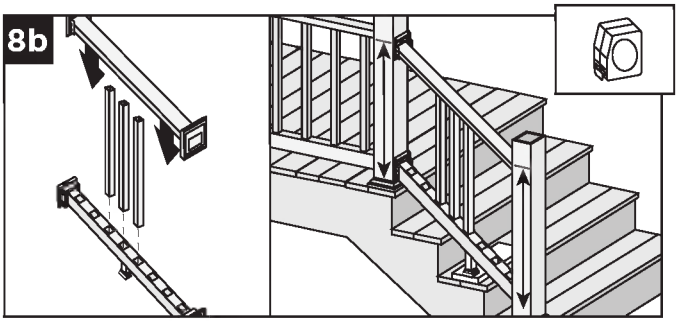

8b. Assemble a few of the balusters into the bottom and top railings (make sure balusters are setting at 90°) and set this on scrap material clearing the stair treads to determine where bracket locations need to be. Remember in most cases, a post and post sleeve longer than 39" (99.1 cm) will be needed on the lower section of stair rail to accommodate stair angle.

8c. After locating appropriate position for railing section remove top rail and balusters and attach bottom stair bracket (both sides) to post using four #8-10 x 2" (5.1 cm) screws per bracket *(provided)*. Foot block can be extended at this time.

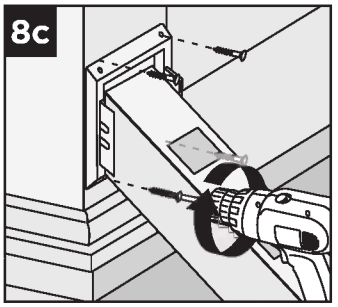

Install Balusters

9. Slide balusters into bottom rail.

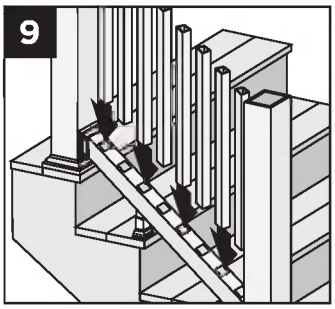

Attachment of Top Rail to Post

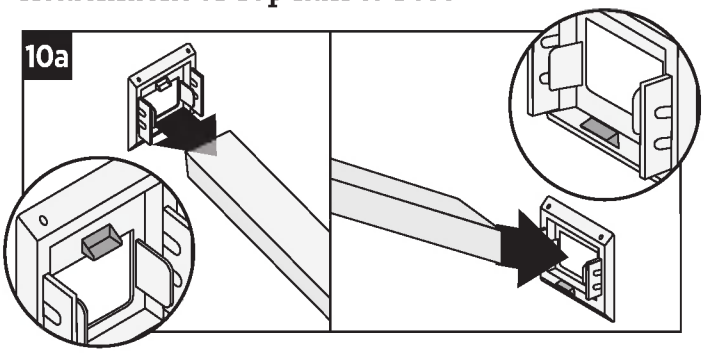

10a. Slide top stair brackets on top rail on each side. Top bracket must have tab on bracket facing up. Bottom bracket must have tab facing down.

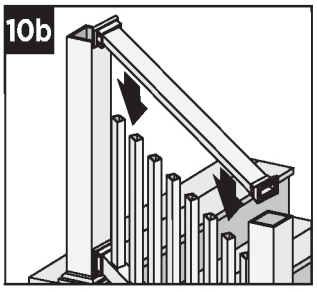

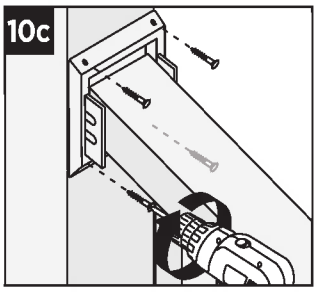

10b. Place top rail onto balusters, allowing the top rail to rest on the surface of the balusters.
10c. Attach top stair bracket (both sides) to post using four #8-10 x 2" (5.1 cm) screws per bracket *(provided)*.

Attachment of Bottom and Top Brackets to Rails

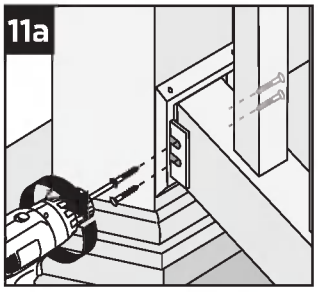

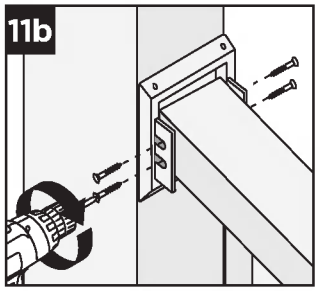

11a. Install bottom stair bracket (both sides) to railing using four #10 x 1" screws per bracket *(provided)*.
11b. Install top stair bracket (both sides) to railing using four #10 x 1" (2.5 cm) screws per bracket *(provided)*.

Attaching Bracket Covers and Post Caps

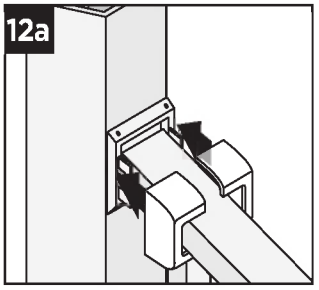

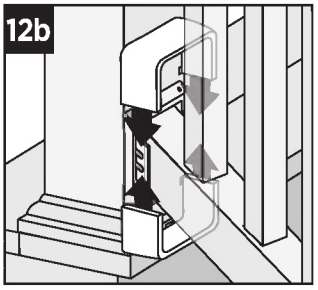

12a. Snap bracket covers over top rail bracket.
12b. Snap bracket covers over bottom rail bracket.
12c. Secure post caps with silicone or PVC adhesive.

NOTE: *Clean-up any excess adhesive before drying.*

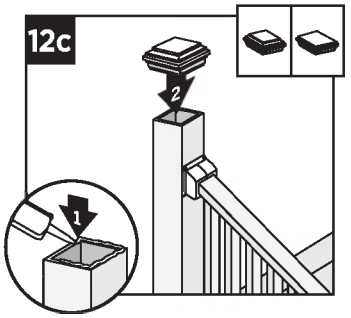

HOW TO INSTALL TREX SELECT® RAILING FOOT BLOCKS
TREX SELECT®

Read all instructions BEFORE installation.

NOTE: *Foot blocks must be placed before installing bottom rails.*

NOTE: *One centered foot block is required for every section of railing or stairway section.*

Attaching Foot Block to Bottom Rail

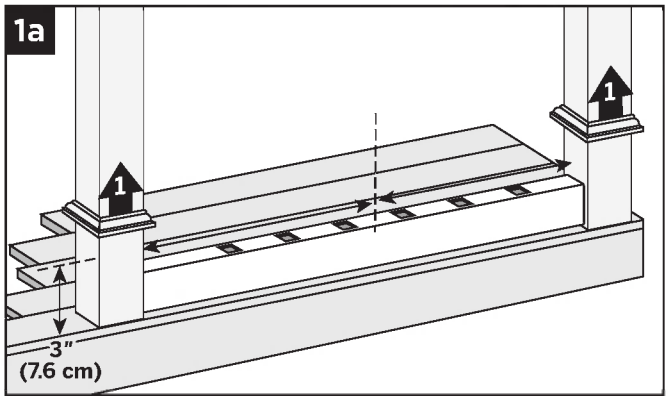

1a. Center and cut bottom rail to fit between post span, making sure to cut from both sides of bottom railing to allow for balusters to be equally spaced.

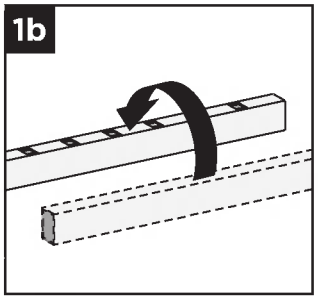

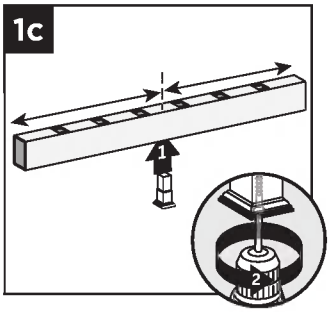

1b. Invert the Select bottom rail.
1c. Center foot block on Select bottom rail. Drill 1/16" (0.15 cm) pilot hole through center of rail, then attach foot block to rail using 2" (5.1cm) screw (*provided*). **DO NOT** extend foot block.

Drill Pilot Hole for Foot Block Base Plate

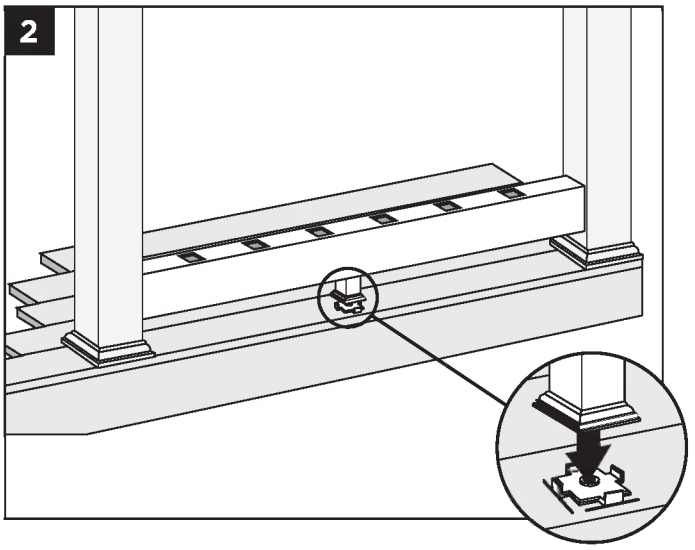

2. Center bottom railing with foot block attached (**DO NOT EXTEND FOOT BLOCK**) in between post span. Place base place directly under location of foot block placement and mark accordingly.

Installing Foot Block Base Plate

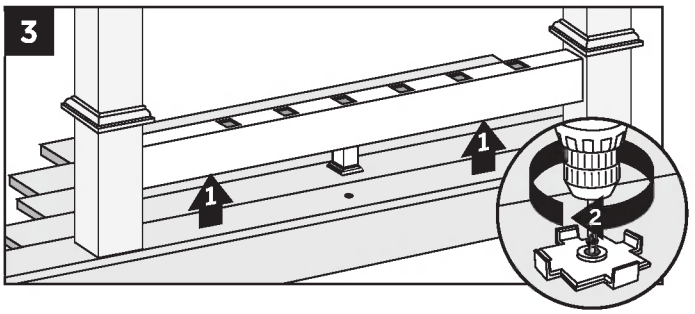

3. Remove rail. Position foot block base plate at marked locations and drill a 1/16" (0.15cm) pilot hole into deck board. **SECURE** foot block base plate with #10 x 3/4" (1.9 cm) stainless steel screws *(provided)*.

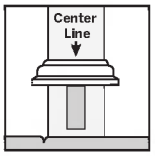

Installing Select Railing Section

4. *Install Select horizontal railing section as shown on pages 105-107.*

Extending and Securing Foot Block

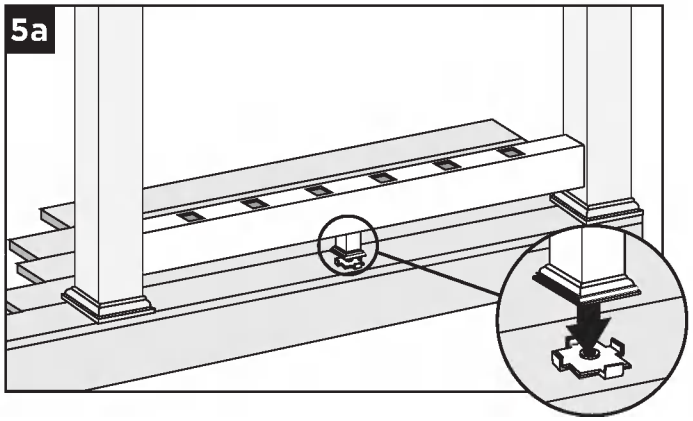

5a. Extend foot block to seat on foot block base plate.

5b. With foot block fully seated on base plate, secure with two 3/4" (1.9 cm) retaining screws *(provided)*. Install one on each side of foot block 1-1/2" (3.8 cm) from bottom of base. Push in screw plugs/covers.

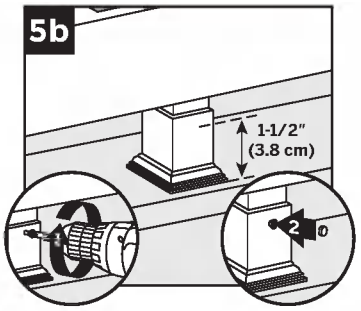

NOTE: *For better ease of attachment, predrilling is recommended using 7/64" (0,28 cm) max drill bit to help avoid possible splitting of the foot block.*

HOW TO INSTALL TREX SELECT™ FOOT BLOCK FOR STAIR RAILING

Cutting Foot Block

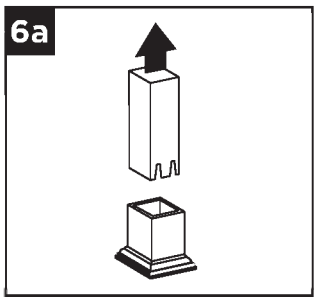

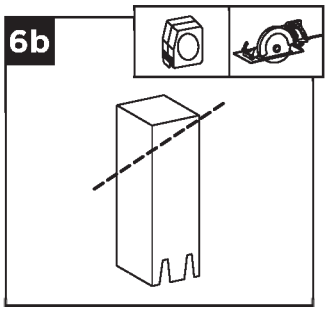

6a. Dismantle foot block into two sections – this can be done by fully extending the upper beam and continuing to pull this through which will separate the foot block into two sections.

6b. For stair applications, cut top section of foot block at an angle to match rail.

NOTE: USE CAUTION WHEN CUTTING – CUT SLOWLY TO HELP MINIMIZE POSSIBLE BREAKAGE DURING CUTTING.

6c. Re-assemble the foot block by pushing the upper beam through the underside of the base of the foot block and allowing this to catch/snap into position. **DO NOT** fully extend at this time.

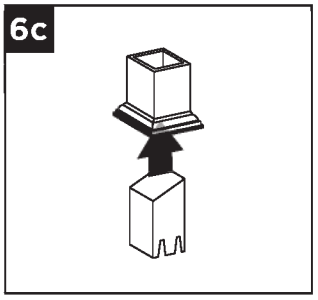

7. Place scrap deck board at nose of stair tread as close to center of railing span as possible, and place foot block on top of scrap board near the nose of the tread. Position bottom stair rail on stair tread and mark the underside of the bottom stair rail for location of foot block.

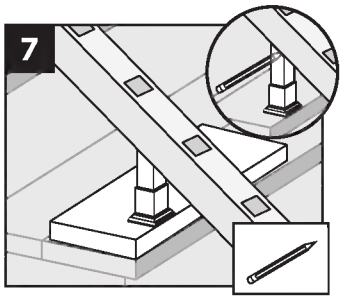

Attaching Foot Block to Bottom Stair Rail

8. Invert bottom stair rail. Center foot block on bottom rail and attach at marked location. **DO NOT** extend foot block.

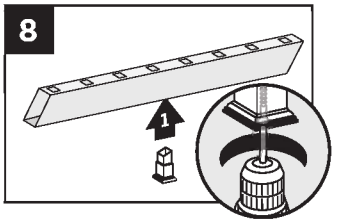

Complete Stair Rails Installation

9. Install Select stair railing section as *per pages 109 - 111*. Foot block can be extended after bottom railing has been fully installed.

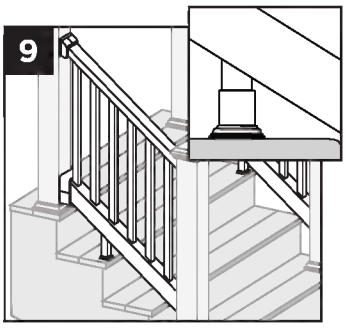

TREX® TRADITIONAL RAILING

PARTS

A. Top rail
B. Lateral rail
C. Balusters
D. Post sleeve
E. Post sleeve skirt
F. Trex decking
G. TrexTrim™ or Trex fascia
H. Code-approved wood joist - 2" x 8" (5.1 cm x 20.3 cm)
I. Code-approved wood rim joist - 2" x 8" (5.1 cm x 20.3 cm) or larger
J. Foot block

» *Escapes and 5" (12.7 cm) Contours cannot be used for top rail.*
» *6" x 6" (15.2 cm x 15.2 cm) post sleeve cannot be used with any Trex Traditional railing installs.*
» *Trex Post Mounts (for decking or concrete) cannot be used with Trex Traditional Railing.*

Traditional Raised/Option 1

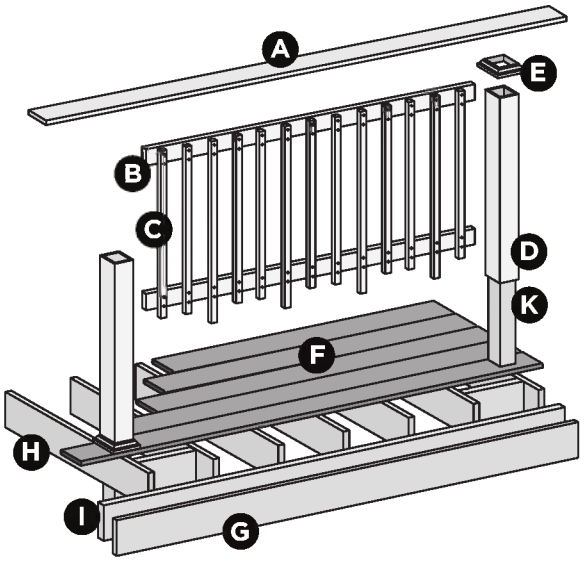

Traditional Raised/Options 2 and 3

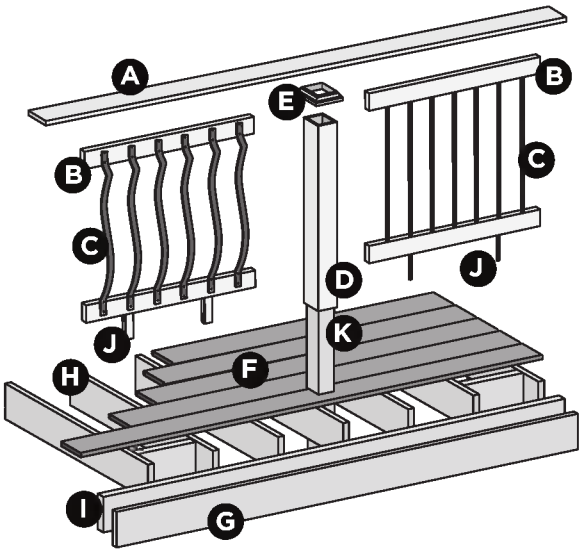

BALUSTER OPTIONS

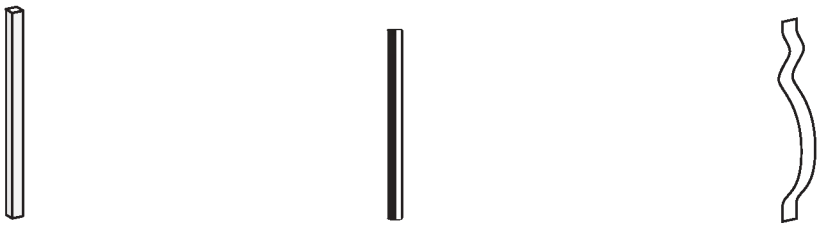

Standard

Round Aluminum
(Only for raised railing design)

Architectural
(Only for raised railing design)

NOTE: *All Trex Traditional Railings are designed to span posts at maximum of 6' (1.83 m) on center.*

NOTE: *The Trex guardrail system complies with current BOCA, ICBO, SBCCI and ICC model codes for a guardrail system. See local building codes for other requirements. For more detailed installation instructions, visit trex.com*

NOTE: *Trex Traditional Railings are designed to be installed OVER the decking frame or on inside of rim joist. Notching of pressure-treated posts or posts installed on outside of rim joist are not allowed.*

TREX® TRADITIONAL RAILING

Traditional Railing Styles

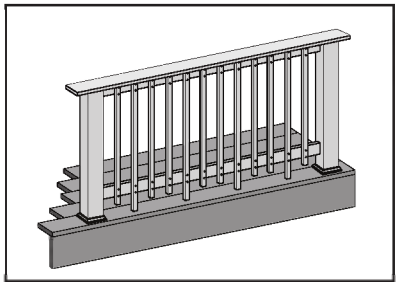

With Standard Trex Balusters/Option 1

A. Pressure-treated post with Trex post sleeve or Trex Transcend® 4″ x 4″ (10.2 cm x 10.2 cm) post sleeve
B. Deck board top rail
NOTE: DO NOT USE *with Escapes.*
C. 2″ x 4″ (5.1 cm x 10.2 cm) Lateral top and bottom rail
D. Trex balusters
See page 116 for "How to Install Raised Railing/Option 1".

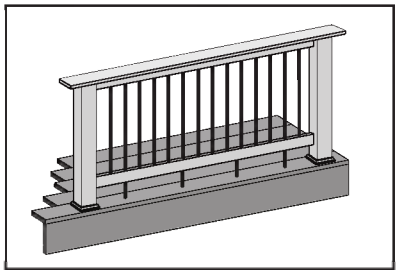

With Round Aluminum Balusters/Option 2

A. Pressure-treated post with Trex post sleeve or Trex Transcend® 4″ x 4″ (10.2 cm x 10.2 cm) post sleeve
B. Deck board top rail
NOTE: DO NOT USE *with Escapes.*
C. 2″ x 4″ (5.1 cm x 10.2 cm) lateral top rail
D. Trex Round Aluminum balusters
See page 118 for "How to Install Raised Railing/Option 2".

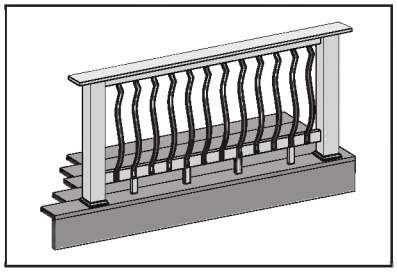

With Architectural Balusters/Option 3

A. Pressure-treated post with Trex post sleeve or Trex Transcend® 4″ x 4″ (10.2 cm x 10.2 cm) post sleeve
B. Deck board top rail
NOTE: DO NOT USE *with Escapes.*
C. 2″ x 4″ (5.1 cm x 10.2 cm) lateral top rail
D. Trex Traditional Architectural balusters
See page 122 for "How to Install Raised Railing/Option 3".

TRADITIONAL COLORS: *See inside back cover for color palette.*

HOW TO INSTALL RAISED RAILING
TREX® TRADITIONAL/OPTION 1

Rails BETWEEN Posts with STANDARD Trex Balusters

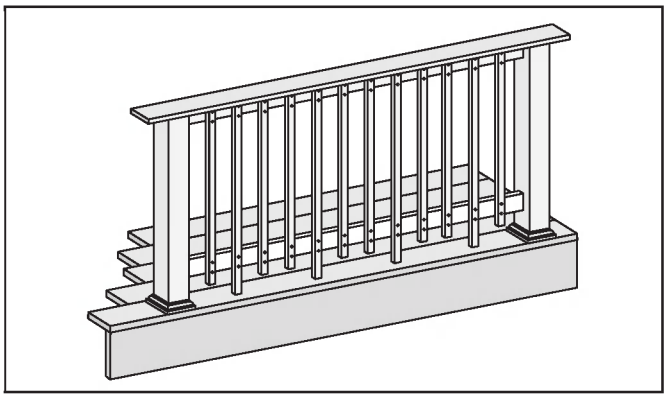

Installing Pressure-Treated Posts

» Attach posts using 1/2" (1.3 cm) carriage bolts.
» Minimum joist size is 2" x 8" (5.1 cm x 20.3 cm).
» Top bolt must be 1" (2.5 cm) from top of joists.
» Bottom bolts must be 5-1/8" (13 cm) from top .. bolts.

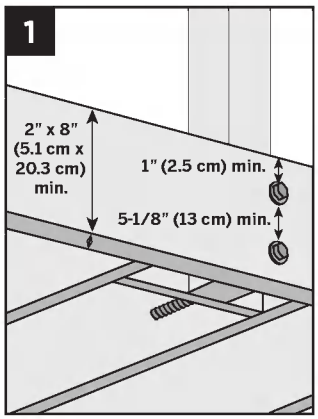

NOTE: *Blocking can be added for extra strength.*

Installing Post Sleeve Skirts and Post Sleeves

2. Slide post skirt over post and down to rest on decking surface. Slide post sleeve over post and position inside post skirt.

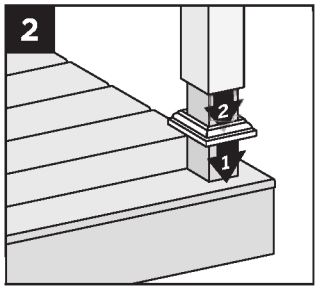

NOTE: *Shims can be used to plumb post sleeves.*

Cutting Posts to Length and Installing Top Rail

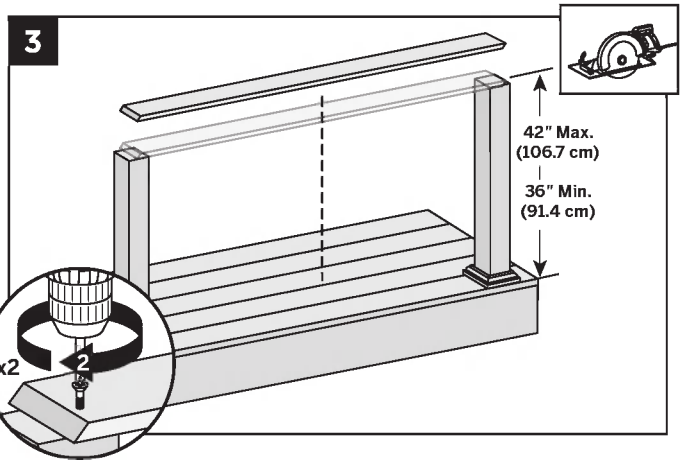

3. Cut posts to designated height as measured from top of decking surface. Measure distance between posts from center-to-center.

   Make scarf cuts on each end of deck board and use two exterior-approved screws per end to secure boards to posts with board centered over posts.

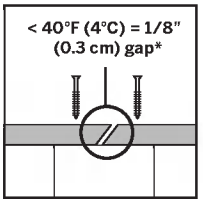

NOTE: *If installing at below 40°F (4°C) leave 1/8" (0.3 cm) gap in scarf joints between boards.*

Cutting Lateral Rails

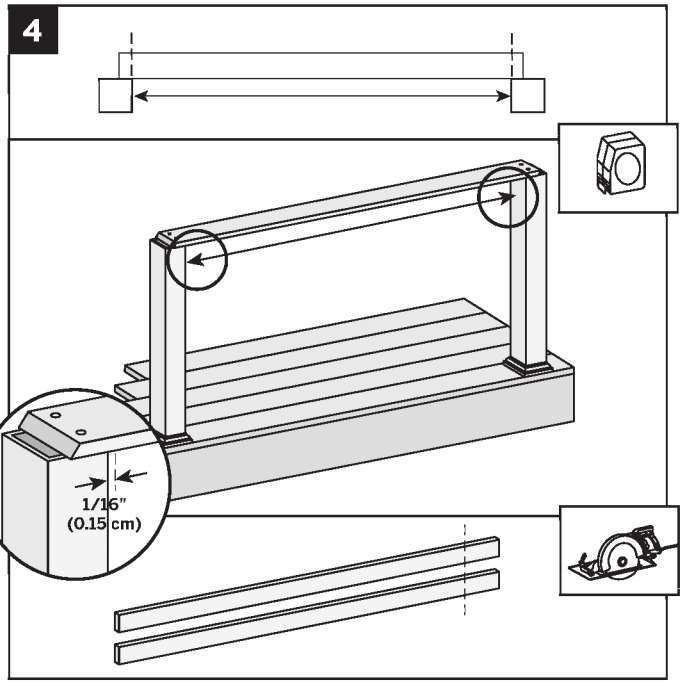

4. Measure distance between inside edges of posts and cut two 2" x 4" (5.1 cm x 10.2 cm) lateral rails to fit. Leave 1/16" (0.15 cm) gap at each end for cold weather expansion.

HOW TO INSTALL RAISED RAILING/CONTINUED
TREX® TRADITIONAL/OPTION 1

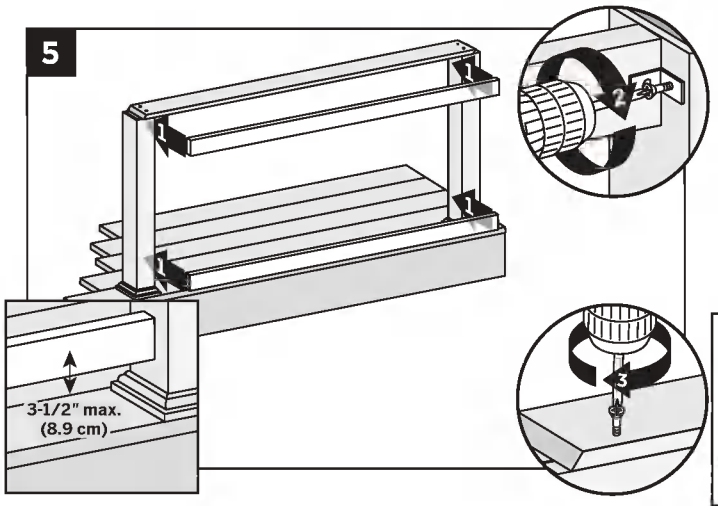

5. Center upper lateral rails under top rails to posts attaching with "L" brackets or equivalent construction method. (If toenailing screws into lateral railing, predrill these holes first to help prevent splitting and mushrooming of the screw.) Secure with 2-1/2" (6.4 cm) composite-approved screws and attach top rail to lateral rail with one screw every 12" (30.5 cm). Bottom rails attach with "L" brackets or equivalent construction method with 3-1/2" (8.9 cm) maximum clearance above deck surface.

Installing Balusters

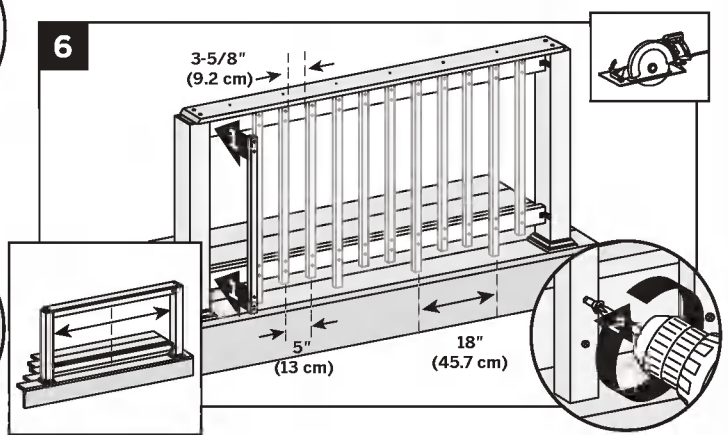

6. Cut balusters to length, pre-drill two holes at top and bottom sides that will face outward on each baluster. Locate the center between posts, mark and place first baluster and secure with four 2-1/2" (6.4 cm) exterior-approved screws. Space balusters to the left and right a maximum of 3-5/8" (9.2 cm) edge-to-edge or 5" (13 cm) on center.
7. One baluster must extend to decking surface every 18" (45.7 cm). Typically four per 6' (1.8 m) application.

HOW TO INSTALL STAIR RAILING
TRADITIONAL RAISED/OPTION 1

Installing Posts for Stair Railing

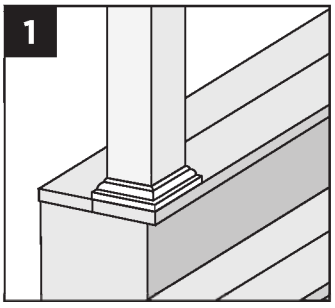

1. In most cases, a pressure-treated post and or post sleeve longer than 39" (99.1 cm) is required for the lower stair rail sections to accommodate stair angle. Both top and bottom posts need to be installed on outside corners (nose) of stair treads.

NOTE: *Posts, post sleeve skirts, and post sleeves are installed per standard Traditional railing instructions.* *See page 116.*

Measuring and Cutting Railings

2. Determine length and angle of top and lateral rails. Cut and install top rails per specific option chosen for Traditional railing.

NOTE: *Allow a minimum clearance of 1" (2.5 cm) from stair treads.*

Cut lateral rails to proper angle and install per specific option chosen for Traditional railing.

Cutting and Installing Balusters

3. Cut balusters to proper length and install per specific option chosen for Traditional railing.

HOW TO INSTALL RAISED RAILING
TREX® TRADITIONAL/OPTION 2

Rails BETWEEN Posts with Round Aluminum Balusters

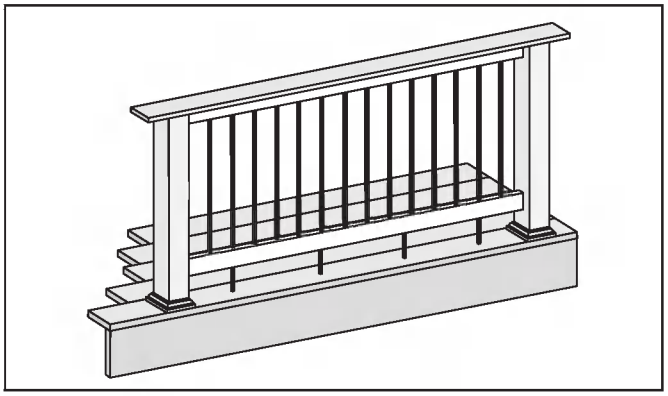

1. **Attaching Posts, Post Sleeve Skirts, and Post Sleeves** *See instructions on page 116.*

Cutting Posts and Lateral Rails to Length

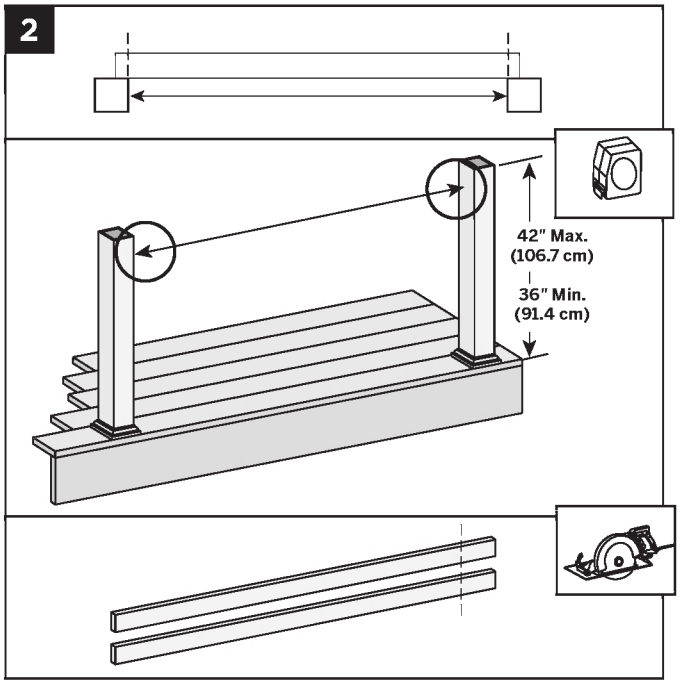

2. Cut posts to length. Measure distance between inside edges of posts and cut two 2" x 4" (5.1 cm x 10.2 cm) lateral rails to fit. Leave 1/16" (0.15 cm) gap at each end for cold weather expansion.

Installing Foot Blocks

NOTE: *This step is done* ***BEFORE*** *you attach the 2" x 4" (5.1 cm x 10.2 cm) bottom lateral rail to posts.*

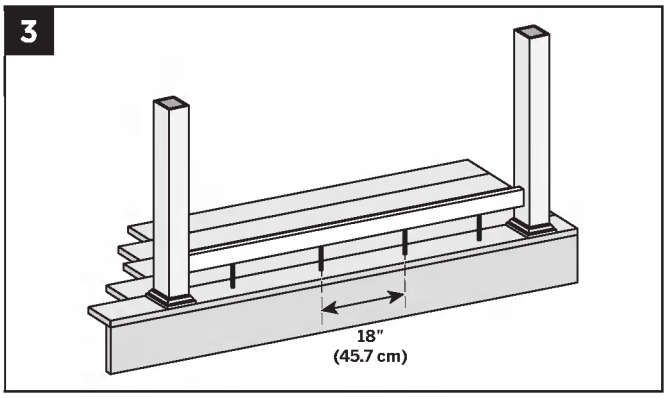

3. **Option 1:** Cut round balusters for foot blocks and place every 18" (45.7 cm). Secure in same method as balusters on lateral bottom rail and deck surface.
   Option 2: Cut square balusters for foot blocks and place every 18" (45.7 cm) on lateral bottom rail. Toenail screws into foot blocks and bottom rail to secure.

Securing Bottom Lateral Rail

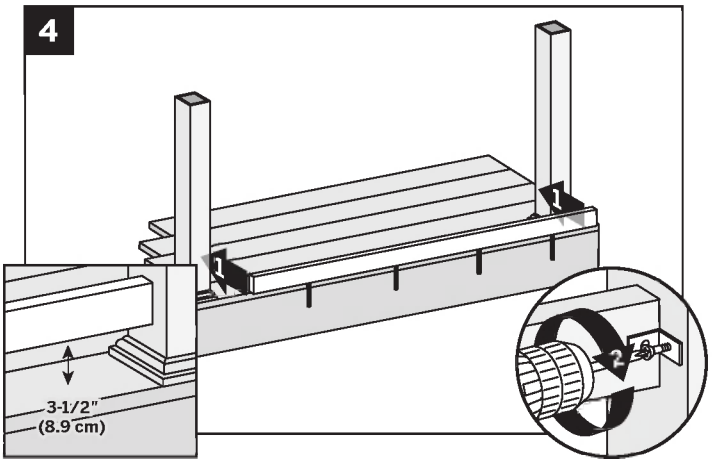

4. Place bottom lateral rail between posts and attach using "L" brackets or equivalent construction method. Secure with 2-1/2" (6.4 cm) composite-approved screws.

HOW TO INSTALL RAISED RAILING/CONTINUED
TREX® TRADITIONAL/OPTION 2

BALUSTER SIZE AND SPACING OPTIONS

For 36" (91.4 cm) rail height, use Trex 26" (66 cm) round aluminmum balusters.
Part number: **BK3Q26RBK**

For 42" (106.7 cm) rail height, use Trex 32" (81.3 cm) round aluminum balusters.
Part number: **BK3Q32RBK**

Measure baluster spacing
Length of rail _____" ÷ 4.5 = _____balusters

- » If number is odd, balusters will be centered.
- » If number is even, balusters will be offset 2-1/4" (5.7 cm) from center.

Installing Baluster Connectors

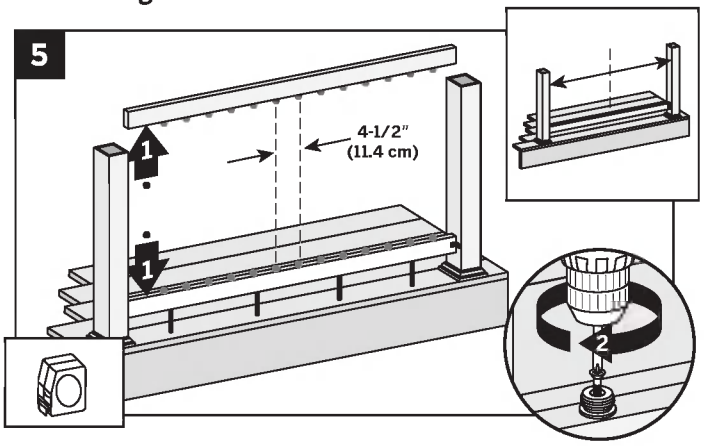

5. Mark center on top and bottom lateral rails and attach baluster connectors 4-1/2" (11.4 cm) on center.

NOTE: *Purchase level baluster connectors separately. Black 3/4" (1.9 cm) Horizontal Baluster Connectors are Part number:* ***BK075HCON***

Installing Balusters

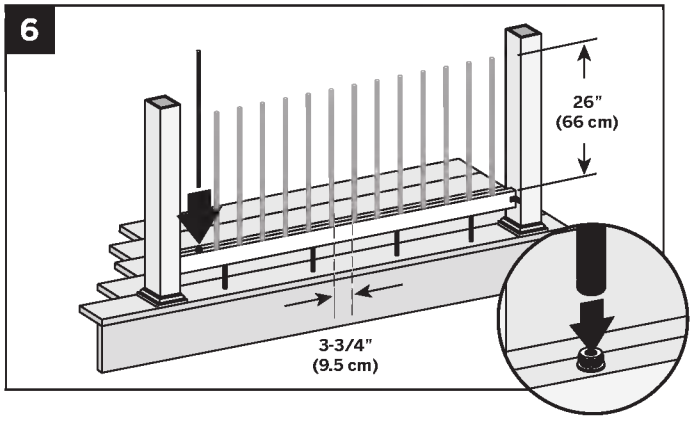

6. Insert balusters into connectors on bottom lateral rail.

Securing Upper Lateral Rail

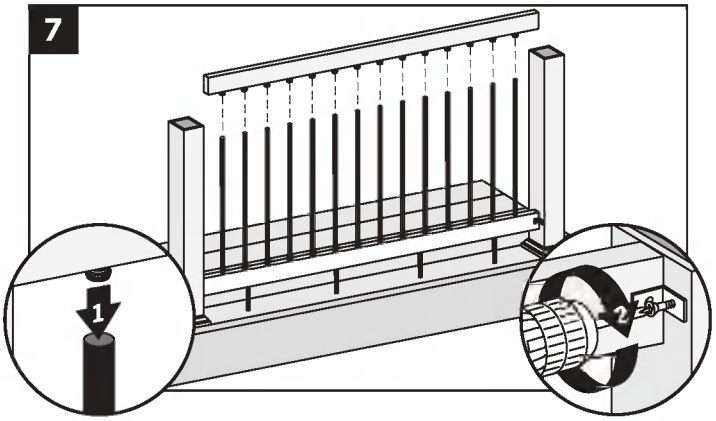

7. Position top lateral rail between posts and lower to insert balusters into connectors. Attach both ends to posts using "L" brackets or equivalent construction method. Secure with 2-1/2" (6.4 cm) composite-approved screws.

Installing Top Rail

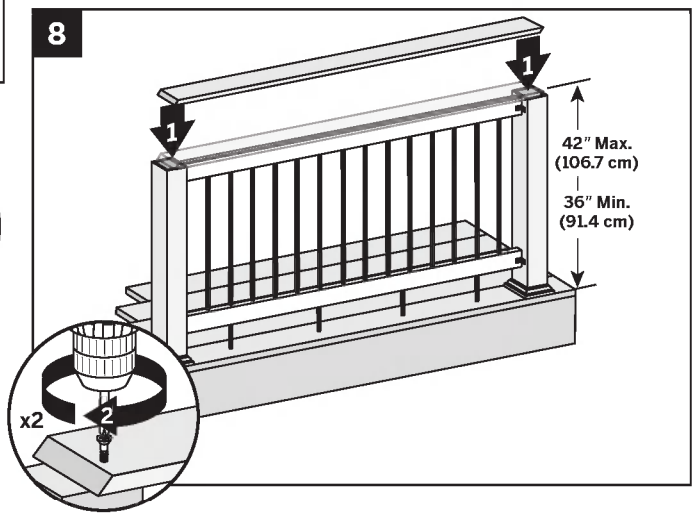

8. Measure distance between the posts from center-to-center.

   Make scarf cuts on each end of deck board and use two exterior-approved screws per end to secure boards to posts with board centered over posts. Secure with 2-1/2" (6.4 cm) composite-approved screws every 12 inches.

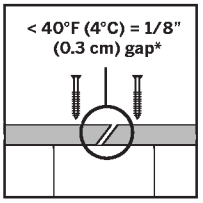

NOTE: *If installing at below 40°F (4°C), leave 1/8" (0.3 cm) gap in scarf joints between boards.*

HOW TO INSTALL RAISED STAIR RAILING
TREX® TRADITIONAL/OPTION 2

Installing Stair Railing with Round Aluminum Balusters

BALUSTER OPTIONS AND CONNECTORS

For 36" (91.4 cm) rail height, use
Trex 26" (66 cm) round aluminum balusters.
Part number: **BK3Q26RBK**

For 42" (106.7 cm) rail height, use
Trex 32" (81.3 cm) round aluminum balusters.
Part number: **BK3Q32RBK**

Black 3/4" (1.9 cm) stair baluster connectors
Part number: **BK075SCON**

Measure baluster spacing
Length of rail _____" ÷ 5.5 = _____balusters

- » If number is odd, balusters will be centered.
- » If number is even, balusters will be offset 2-3/4" (7 cm) from center.

1. **Installing Posts for Stair Railing**
See instructions on page 117.

Cutting Lateral Rails and Measuring Baluster Spacing

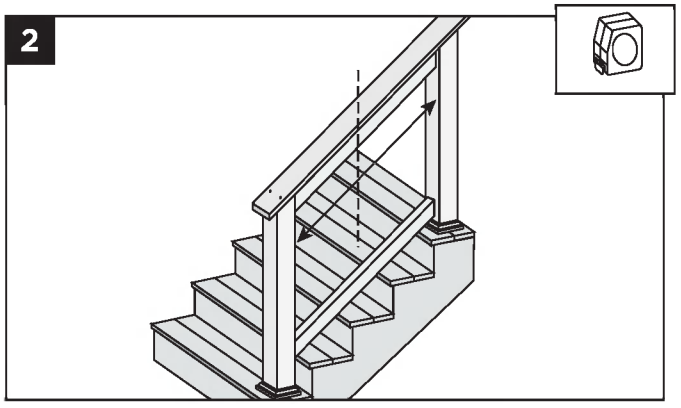

2. Cut top and bottom rails the distance between posts and determine angle of end cuts and mark centers. Use equation *(above)* to determine number of balusters needed.

Installing Foot Blocks

NOTE: *This step is done* ***BEFORE*** *you attach the 2" x 4" (5.1 cm x 10.2 cm) bottom lateral rail to posts.*

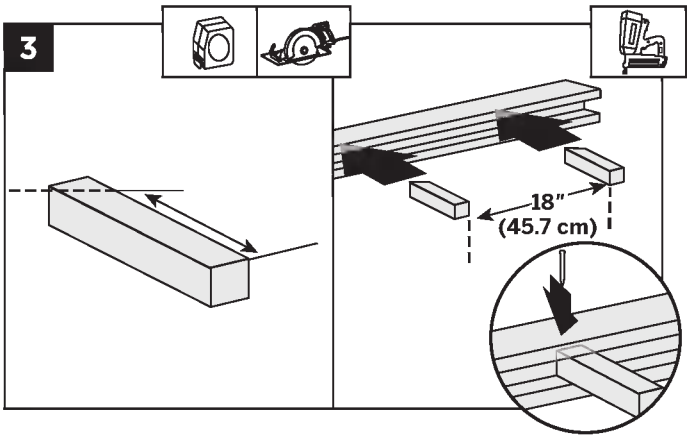

3. **Option 1:** Cut square balusters for foot blocks and place every 18" (45.7 cm) on lateral bottom rail. Toenail screws into foot blocks and bottom rail to secure.
Option 2: Cut round balusters for foot blocks and place every 18" (45.7 cm). Secure in same method as balusters on lateral bottom rail and deck surface.

Installing Baluster Connectors

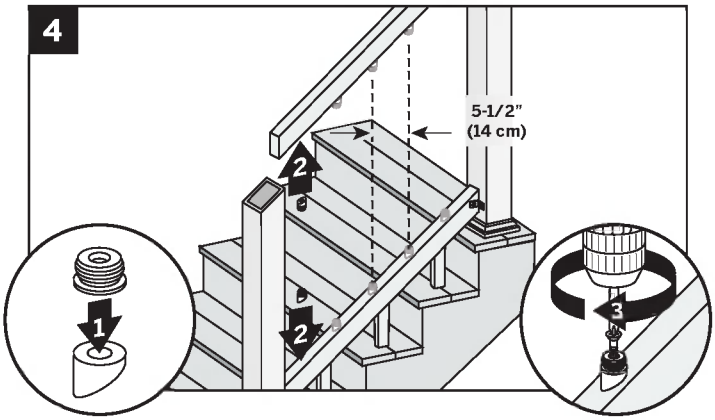

4. Install stair baluster connectors and adaptors to top and bottom rails, 5-1/2" (14 cm) on center.

NOTE: *Black 3/4" (1.9 cm) stair baluster connectors are sold separately. Part number* ***BK075SCON***

HOW TO INSTALL RAISED STAIR RAILING/CONTINUED
TREX® TRADITIONAL/OPTION 2

Securing Bottom Lateral Rail

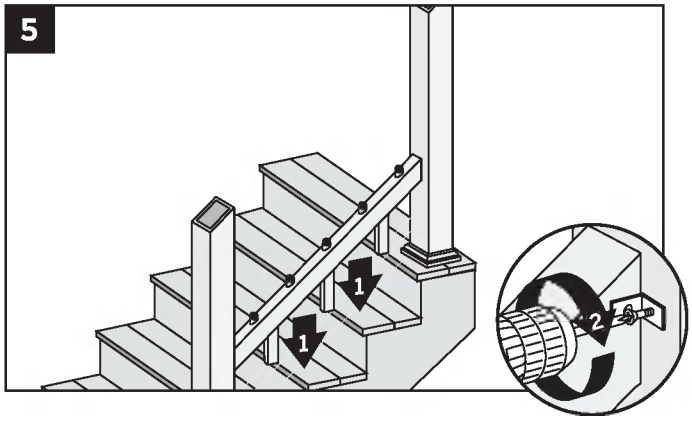

5. Place bottom lateral rail between posts and attach using "L" brackets or equivalent construction method. Secure with 2-1/2" (6.4 cm) composite-approved screws.

Installing Balusters and Top Lateral Rail

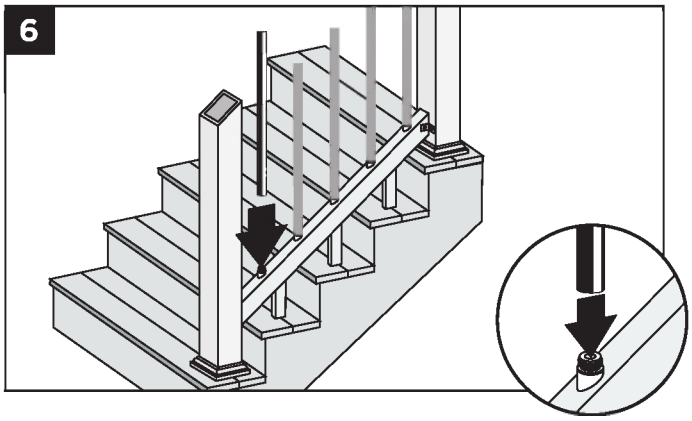

6. Insert end of balusters into adapters on bottom rail.

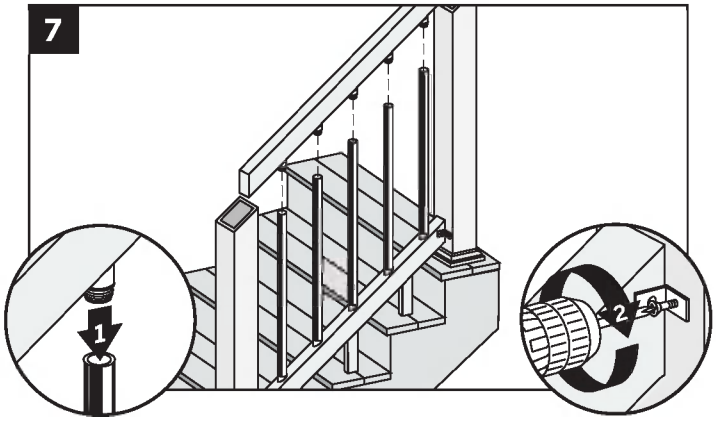

7. Insert end of balusters to adapters on top lateral rail and connect rail to posts with "L" brackets or equivalent construction methods.

Installing Top Hand Rail

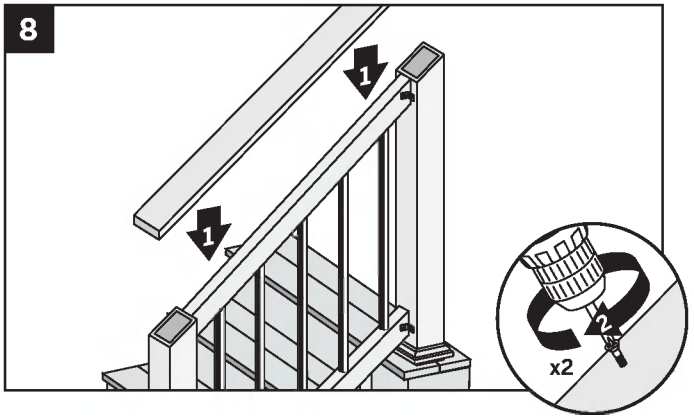

8. Center deck board across top of posts and attach using two exterior-approved screws positioned laterally on both ends. Secure with 2-1/2" (6.4 cm) composite-approved screws every 12 inches.

HOW TO INSTALL RAISED RAILING
TREX® TRADITIONAL/OPTION 3

Rails BETWEEN Posts with ARCHITECTURAL Balusters

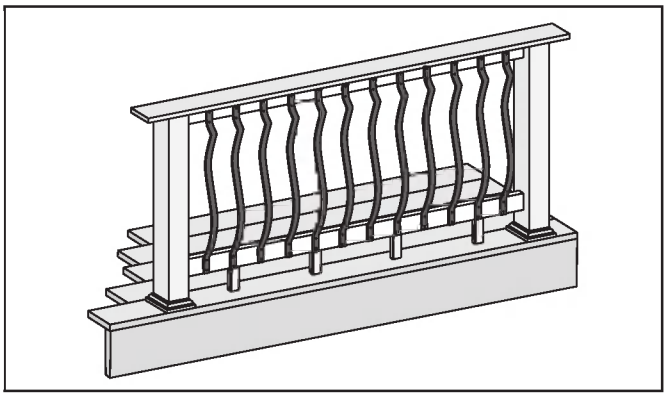

1. **Attaching Posts, Post Sleeve Skirts, and Post Sleeves** *See instructions on page 116.*

Cutting Posts to Length and Installing Top Rail

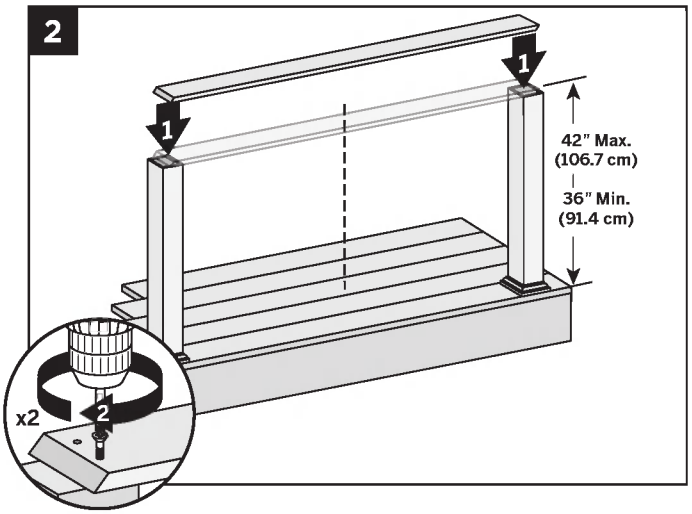

2. Cut posts to length. Measure distance between posts from center-to-center.

   Make scarf cuts on each end of deck board and use two exterior-approved screws per end to secure boards to posts with board centered over posts.

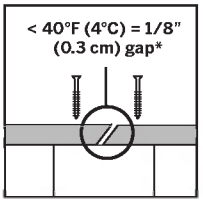

***NOTE:** If installing below 40°F (4°C) leave 1/8" (0.3 cm) gap between deck boards for thermal expansion.*

Cutting Lateral Rail

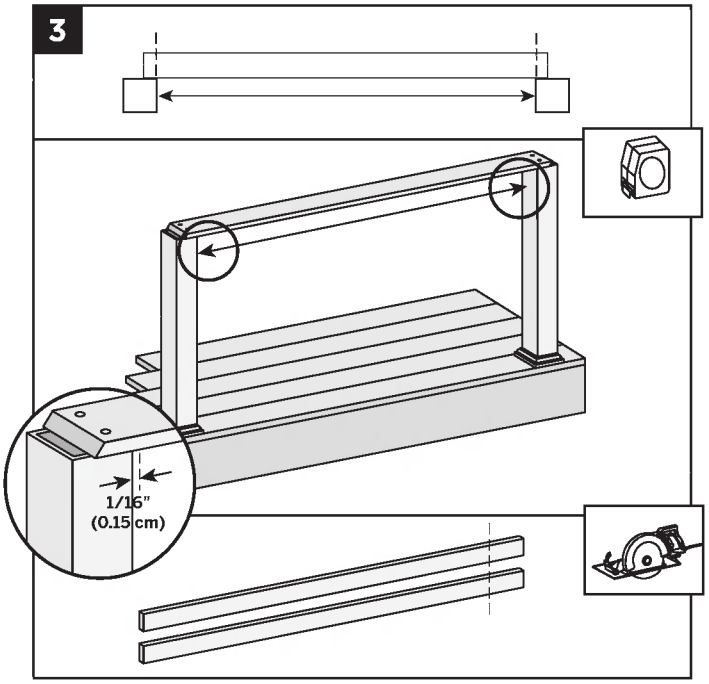

3. Measure distance between inside edges of posts and cut two 2" x 4" (5.1 cm x 10.2 cm) lateral rails to fit. Leave 1/16" (0.15 cm) gap at each end for cold weather expansion.

Installing Foot Blocks

***NOTE:** For ease of installation of foot blocks, install **BEFORE** attaching the bottom rail to the post.*

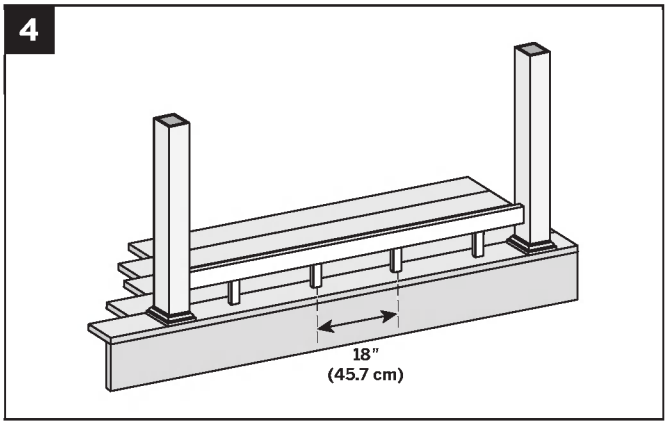

4. Cut square balusters to fit under bottom lateral rail and locate every 18" (45.7 cm). Toenail screws into foot blocks and bottom rail to secure.

Attaching Lateral Rail with L-Brackets

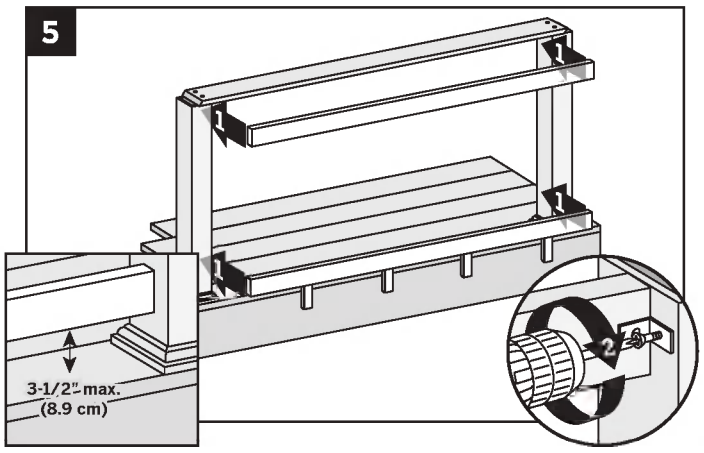

5. Center lateral rail under top rail and attach to posts using an "L" bracket or equivalent construction method. Secure with 2-1/2" (6.4 cm) composite-approved screws and attach top rail with one screw every 12" (30.5 cm).

Installing Balusters

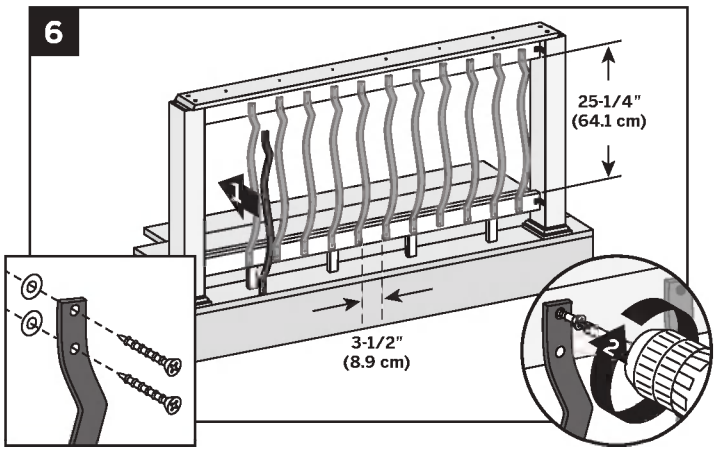

6. Locate the center between posts, mark and place first baluster and secure with four 1-1/2" (6.4 cm) exterior-approved screws. Space balusters to the left and right a maximum of 3-1/2" (8.9 cm) edge-to-edge.

NOTE: *A 2" x 4" (5.1 cm x 10.2 cm) can be used for spacing architectural balusters.*

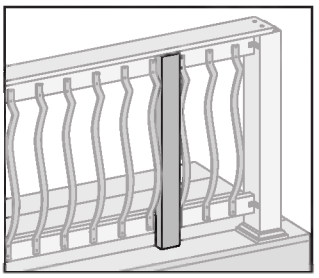

BALUSTER SIZE AND SPACING OPTIONS

For 36" (91.4 cm) rail height, use Trex 32-1/4" (81.9 cm) architectural balusters. *Total height from top rail to deck surface is 35-1/4" (89.5 cm).*
Part number: **BK0132VBK**

For 42" (106.7 cm) rail height, use Trex 40" (101.6 cm) architectural balusters. *Total height from top rail to deck surface is 40" (101.6 cm).*
Part number: **BK0140VBK**

Measure baluster spacing
Length of rail _____" ÷ 4.5 = _____balusters

- » If number is odd, balusters will be centered.
- » If number is even, balusters will be offset 2-1/4" (5.7 cm) from center.

HOW TO INSTALL RAISED STAIR RAILING
TREX® TRADITIONAL/OPTION 3

Installing Stair Railing with Architectural Balusters

BALUSTER OPTIONS AND CONNECTORS

For 36" (91.5 cm) rail height, use Trex 32" (81.3 cm) architectural balusters.
Part number: **BK0132VBK**

For 42" (106.7 cm) rail height, use Trex 40" (101.6 cm) architectural balusters.
Part number: **BK0140VBK**

Measure baluster spacing
Length of rail _____" ÷ 5.5 = _____balusters

- » If number is odd, balusters will be centered.
- » If number is even, balusters will be offset 2-3/4" (7 cm) from center.

1. **Installing Posts for Stair Railing**
See instructions on page 117.

Cutting Lateral Rails and Measuring Baluster Spacing

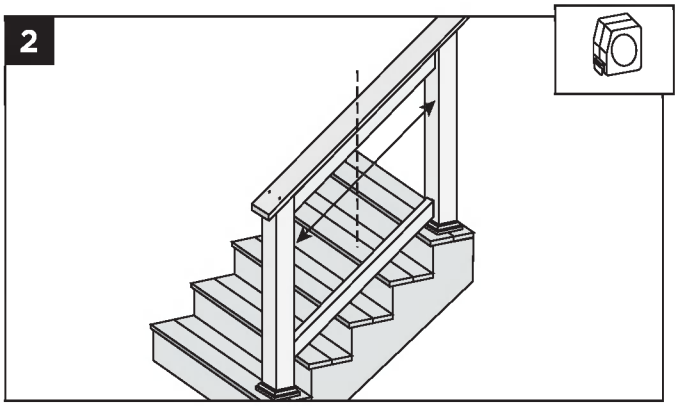

2. Cut top and bottom rails the distance between posts and determine angle of end cuts and mark centers. Use equation *(above)* to determine number of balusters needed.

Installing Foot Blocks

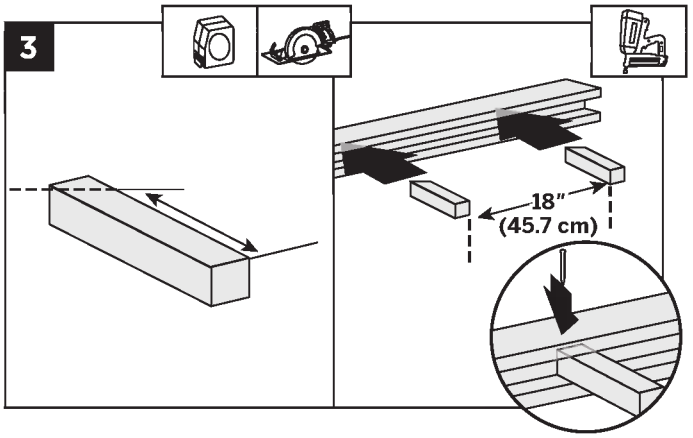

3. Cut square balusters for foot blocks and place every 18" (45.7 cm) on lateral bottom rail. Toenail screws into foot blocks and bottom rail to secure.

Installing Top and Bottom Lateral Rail

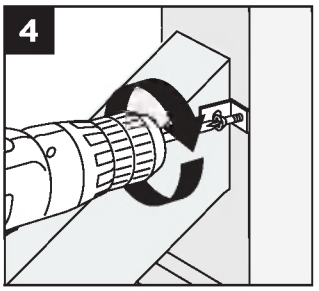

4. Connect rails to posts with "L" brackets or equivalent construction methods.

Installing Balusters

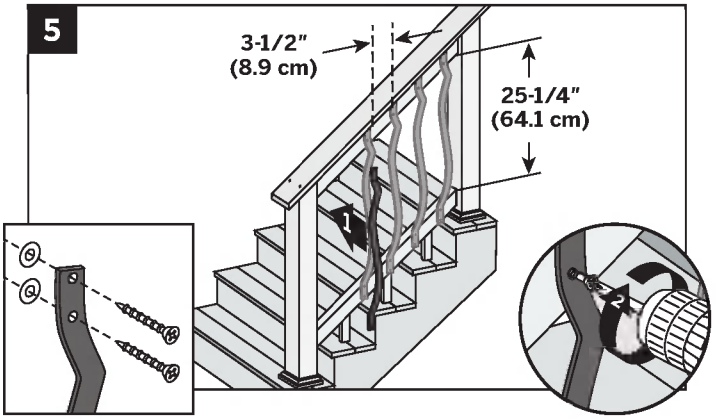

5. Measure distance between posts to determine center point of top and bottom rails. Install first baluster with four 1-1/2" (6.4 cm) exterior-approved screws. Space balusters a maximum of 3-1/2" (8.9 cm) edge-to-edge.

NOTE: *A 2" x 4" (5.1 cm x 10.2 cm) can be used for spacing the architectural balusters.*

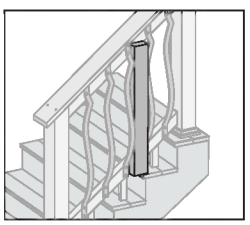

TREX® ADA RAILING

Stair Application

Horizontal Application

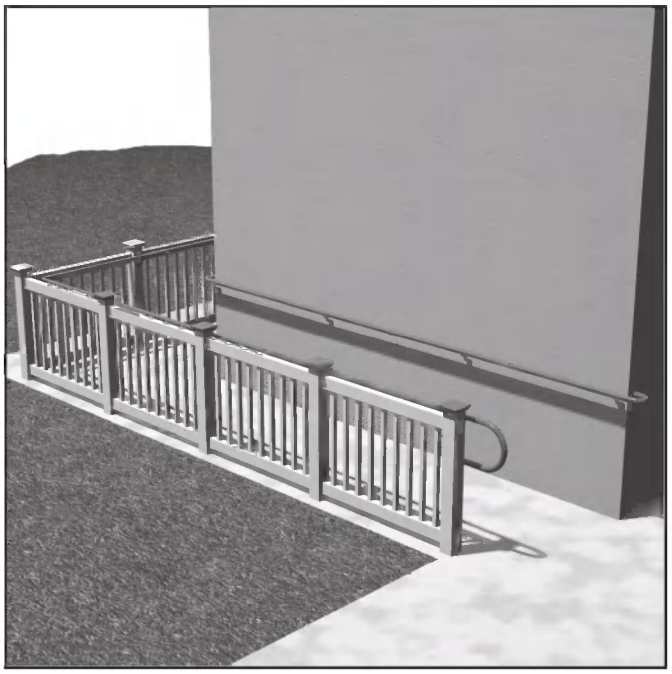

ADA Handrail Guidelines

1. You can install ADA handrails using various design applications such as those for stairs, ramps, and horizontal inclines. Designs include options for straight and 90° wall returns, 90° corners, and adjustable angles. Choose which is best for your needs before installing.
2. The handrail system top rail should be 34″ (86.4 cm) to 39″ (99.1 cm) above the surface. However, verifying height requirements with local building code officials before installing is important as codes vary in different areas.
3. Maintain a minimum clearance of 1-1/2″ (3.8 cm) between the handrail and any obstructions above or behind the handrail.
4. The end loop return at all landings must extend 12″ (30.5 cm) past the end of the ramp or stair application.
5. The slope of the handrail for the ramp should not exceed 1″ (2.5 cm) rise over a 12″ (30.5 cm) run.
6. The maximum recommended span between supports is 6′ (1.83 m) on center.
7. For ramps and stairs, cut railings along with the end loops and/or post returns to the proper angle using a miter saw to ensure proper fit.

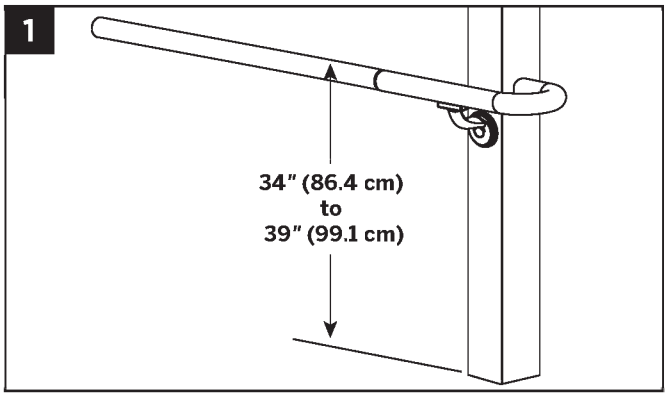

HOW TO INSTALL TREX® ADA RAILING

90° Wall Return

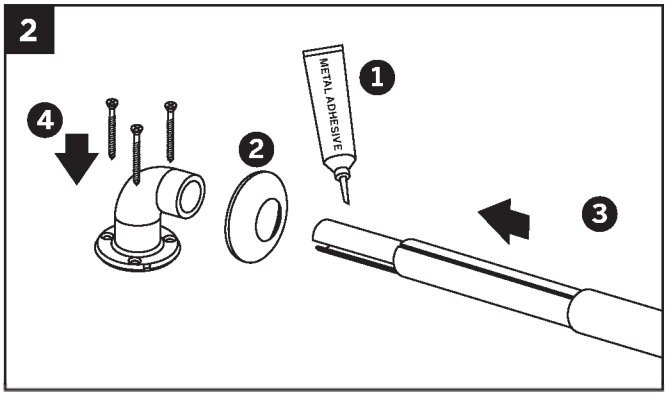

Cut the aluminum and PVC tube to proper length.

1. Apply adhesive to all metal contact surfaces.
2. Make sure flange cover is placed over PVC rail prior to assembly.
3. Slide straight joiner into wall return and aluminum rail support.
4. Attach mounting flange to desired surface. Snap flange cover into place.

NOTE: *Hardware not included.*

Straight Wall Return

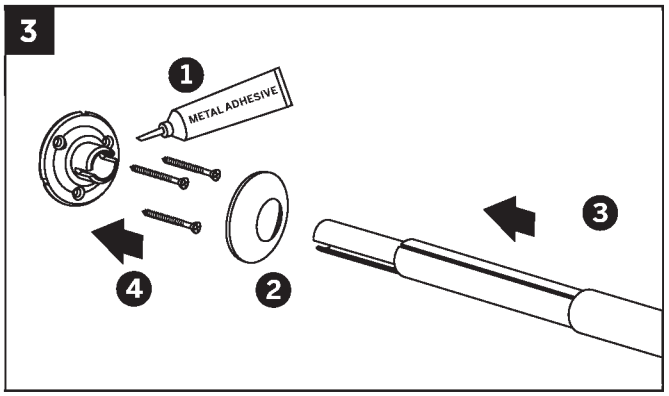

Cut the aluminum and PVC tube to proper length.

1. Apply adhesive to all metal contact surfaces.
2. Make sure flange cover is placed over PVC rail prior to assembly.
3. Insert straight wall return into aluminum rail support.
4. Attach mounting flange to desired surface. Snap flange cover into place.

NOTE: *Hardware not included.*

Handrail Bracket

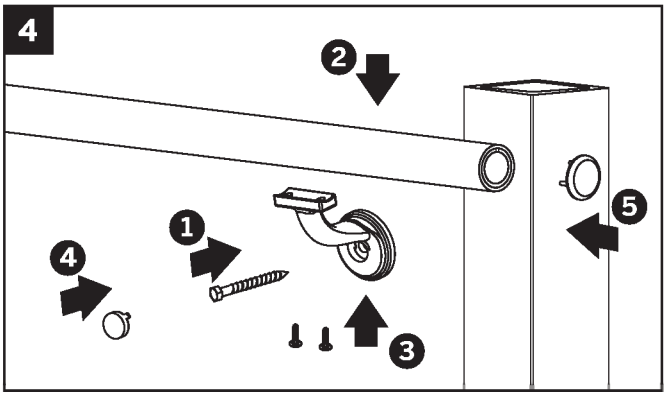

1. Predrill hole using 1/4" (0.6 cm) bit and attach bracket to mounting surface using an appropriate connector (a 3/8" (1 cm) lag bolt at least 2" (5.1 cm) long should be used when mounting to a wood surface).

NOTE: *Lag bolt is not included.*

2. Place the rail at appropriate location on bracket.
3. Pre-drill two holes in the rail with an 11/64" (0.4 cm) drill bit at appropriate location and attach with screws *(provided)*.
4. Snap bolt cover into place.
5. Using PVC adhesive, attach handrail end cap (sold separately) to unfinished end of rail.

90° Corner

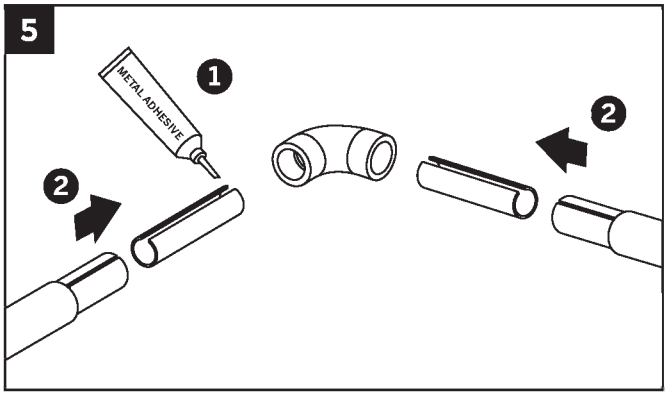

Cut the aluminum and PVC tube to proper length.

1. Apply adhesive to all metal contact surfaces.
2. Slide straight joiner into each side of corner and aluminum rail supports.

NOTE: *A PVC adhesive may be used to ensure a tight seam on the exterior tube. Make sure adhesive cures per manufacturer's instructions.*

HOW TO INSTALL TREX® ADA RAILING

End Loop - Horizontal

18" x 12" x 18" (45.7 cm x 30.5 cm x 45.7 cm)

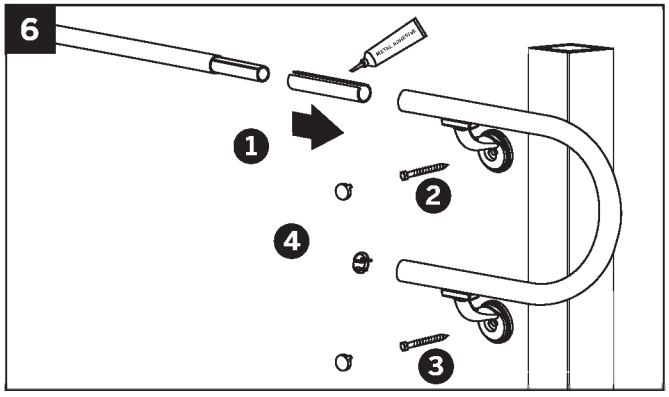

1. Apply adhesive to all metal contact surfaces. Slide straight joiner into end loop and aluminum rail support.
2. Pre-drill holes using 1/4" (0.6 cm) drill bit and attach top bracket to mounting surface using an appropriate connector (a 3/8" (1 cm) lag bolt at least 2" (5.1 cm) long should be used when mounting to a wood surface).
3. Attach bottom bracket in the same manner. Place end loop in appropriate location on bracket. Pre-drill four holes in end loop with an 11/64" (0.4 cm) drill bit at appropriate location and attach with screws *(provided)*. Snap bolt covers into place.
4. Using PVC adhesive, attach hand rail end cap (sold separately) to unfinished end of rail.

End Loop - Angled

18" x 12" x 18" (45.7 cm x 30.5 cm x 45.7 cm)

NOTE: *Rail and end loop must be cut to appropriate angles before installing.*

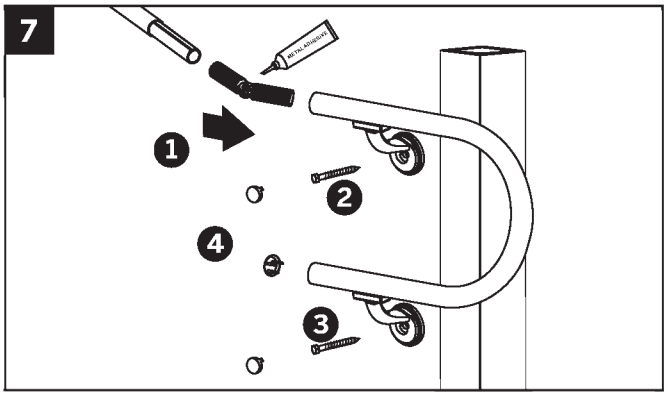

1. Apply adhesive to all metal contact surfaces. Slide adjustable joiner into end loop and aluminum rail support. Make sure adjustable joiner is plumb.
2. Pre-drill holes using 1/4" (0.6 cm) drill bit and attach top bracket to mounting surface using an appropriate connector (a 3/8" (1 cm) lag bolt at least 2" (5.1 cm) long should be used when mounting to a wood surface).
3. Attach bottom bracket in the same manner. Place end loop in appropriate location on bracket. Pre-drill four holes in end loop with an 11/64" (0.4 cm) drill bit at appropriate location and attach with screws *(provided)*. Snap bolt covers into place.
4. Using PVC adhesive, attach hand rail end cap (sold separately) to unfinished end of rail.

Post Return - Horizontal

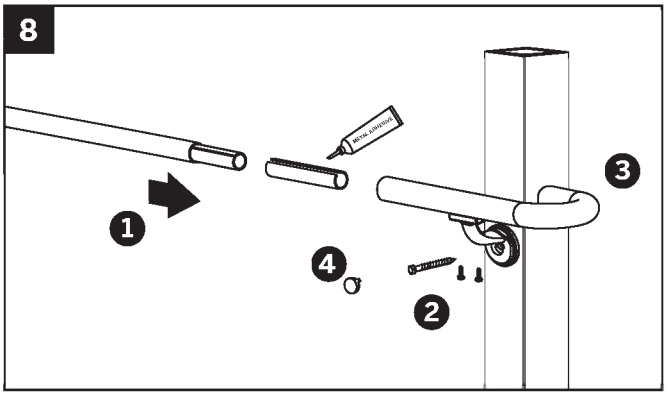

1. Apply adhesive to all metal contact surfaces. Slide straight joiner into post return and aluminum rail support.
2. Pre-drill holes using 1/4" (0.6 cm) drill bit and attach bracket to mounting surface using an appropriate connector (a 3/8" (1 cm) lag bolt at least 2" (5.1 cm) long should be used when mounting to a wood surface).
3. Place post return at appropriate location on bracket. Pre-drill two holes in post return with an 11/64" (0.4 cm) drill bit at appropriate location and attach with screws *(provided)*.
4. Snap bolt covers into place.

NOTE: *A PVC adhesive may be used to ensure a tight seam on the exterior tube. Make sure adhesive cures per manufacturer's instructions.*

HOW TO INSTALL TREX® ADA RAILING

Post Return - Angled

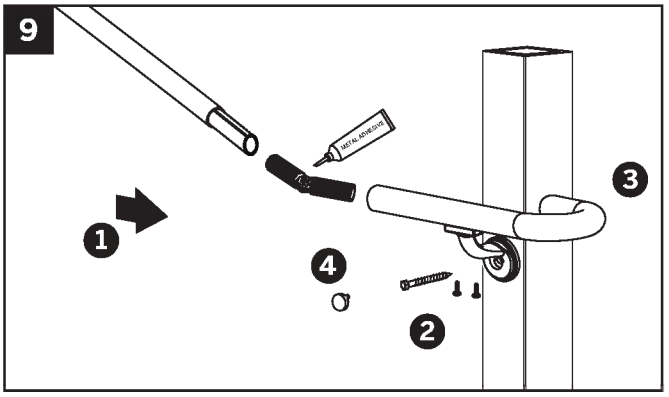

1. Apply adhesive to all metal contact surfaces. Slide adjustable joiner into post return and aluminum rail support. Make sure adjustable joiner is plumb.
2. Pre-drill holes using 1/4" (0.6 cm) drill bit and attach bracket to mounting surface using an appropriate connector (a 3/8" (1 cm) lag bolt at least 2" (5.1 cm) long should be used when mounting to a wood surface).
3. Place post return at appropriate location on bracket. Pre-drill two holes in post return with an 11/64" (0.4 cm) drill bit at appropriate location and attach with screws *(provided)*.
4. Snap bolt cover into place.

Straight Joiner

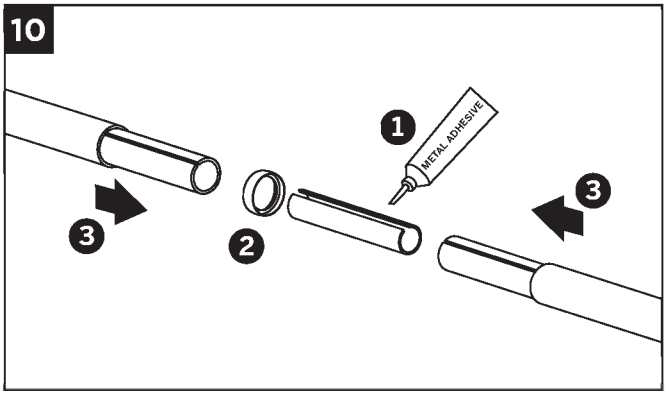

1. Apply adhesive to all metal contact surfaces.
2. **Optional:** Position joint ring between rail sections.
3. Slide joiner into both aluminum rail supports until the joint is tight.

Angled Corner

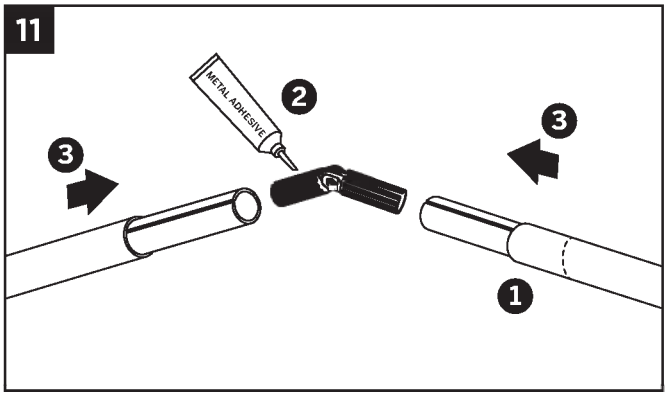

1. Cut the aluminum and PVC tube to proper length at desired angle.
2. Apply adhesive to all metal contact surfaces.
3. Slide rails together until the adjustable joint is tight.

NOTE: *A PVC adhesive may be used to ensure a tight seam on the exterior tube. Make sure adhesive cures per manufacturer's instructions.*

WARRANTIES

TREX TRANSCEND®, TREX ENHANCE®, TREX SELECT® AND TREX® FASCIA LIMITED FADE AND STAIN WARRANTY

For the term set forth below, Trex Company, Inc. (hereinafter "Trex") warrants to the original end-user purchaser (the "Purchaser") that Trex Transcend® decking, porch or fascia, Trex Enhance® decking or fascia, Trex Select® decking or fascia or Trex Fascia, as the case may be (the "Product") will perform, under normal use and service conditions, as follows:

Term of Warranty: The term of this warranty shall begin on the date of original purchase, and shall end (1) twenty-five (25) years thereafter for a residential application of the Product, and (2) ten (10) years thereafter for a commercial application of the Product.

Residential/Commercial Application: For purposes of this warranty, a "residential application" shall refer to an installation of the Product on an individual residence, and a "commercial application" shall refer to any installation of the Product other than on an individual residence.

Fade Resistance: The Product shall not fade in color from light and weathering exposure as measured by color change of more than 5 Delta E (CIE) units.

The Product is designed to resist fading. No material is fade proof when exposed to years of UV exposure and the elements. The Product is designed to resist fading, and will not in any event fade by more than 5 Delta E (CIE) units.

Stain Resistance: The Product shall be resistant to permanent staining resulting from spills of food and beverage items including ketchup, mustard, salad oils, tea, wine, coffee, fruit punch, barbeque sauce, grease, sodas and other food and beverage related items that would typically be present on a residential deck, or mold and mildew naturally occurring in the environment, provided that such substances are removed from the Product with soap and water or mild household cleaners within one (1) week of exposure of the food or beverage to the surface or first appearance of the mold and mildew.

Notwithstanding the foregoing, Trex does not warrant that the Product is stain-proof, and does not warrant stain resistance resulting from spilled or otherwise applied food and beverage substances which are not properly cleaned as provided above within one (1) week of exposure. In addition, materials not covered in the stain resistant warranty include abrasive compounds of acidic or basic pH, paints or stains, strong solvents, metallic rust or other abnormal deck use items, and non-food and non-beverage substances, including but not limited to, biocides, fungicides, plant food, or bactericides. Mold and mildew can settle and grow on any outdoor surface, including this Product. You should periodically clean your deck to remove dirt and pollen that can feed mold and mildew. This warranty does not cover mold and mildew which is not properly cleaned as provided above within one (1) week of first appearance.

Standard Trex Company Limited Warranty: This warranty is in addition to the standard Trex Company Limited Warranty that applies to all Trex products.

Transferability: With respect to a residential application, this warranty may be transferred one (1) time, within the five (5) year period beginning from the date of original purchase by the Purchaser, to a subsequent buyer of the property upon which the Trex products were originally installed. With respect to a commercial application, this warranty is freely transferable to subsequent buyers of the property upon which the Trex products were originally installed.

EXCLUSIONS FROM WARRANTY COVERAGE:

Exposure to Heat: Direct or indirect contact with extreme heat sources (over 275 degrees) may cause fading and may damage the surface of the Product, and any effects of such exposure are expressly excluded from coverage under this warranty.

Surface Damage: Never use metal shovels or sharp-edged tools to remove snow and ice on the surface of the Product. If the surface of the Product is damaged or punctured, this warranty will be voided.

Paint or Other Materials Applied to the Product: If paint or other coating materials are applied to the Product, this warranty will be voided.

Railing: This warranty does not cover Trex Transcend® or Trex Select® railing components.

Other Exclusions: This warranty shall not cover any condition attributable to: (1) improper installation of the Product and/or failure to abide by Trex's installation guidelines, including but not limited to improper gapping; (2) use of the Product beyond normal use or service conditions, or in an application not recommended by Trex's guidelines and local building codes; (3) movement, distortion, collapse or settling of the ground or the supporting structure on which the Product is installed; (4) any act of God (such as flooding, hurricane, earthquake, lightning, etc.); (5) improper handling, storage, abuse or neglect of the Product by Purchaser, the transferee or third parties; (6) any fading or staining not on the walking surface of the Product (i.e., the underside or the ends of the Product); or (7) ordinary wear and tear

Procedure for Making a Claim under this Warranty

In order to make a claim under this warranty, Purchaser must do the following:

1. If the Purchaser is making a claim relating to the warranty on stain resistance, Purchaser must do as follows:

   (a) Purchaser must try to clean the affected area of the deck by using the cleaning procedures described above within one (1) week of exposure of the food or beverage to the Product or first appearance of the mold and mildew.

   (b) If the affected area remains reasonably unsatisfactory after Purchaser has tried these cleaning procedures, then Purchaser must have the affected area of the deck professionally cleaned at Purchaser's expense.

   (c) If the affected area remains reasonably unsatisfactory after the professional cleaning, Purchaser may make a claim under this warranty, provided that such claim is made within thirty (30) days after the professional cleaning.

2. To make a claim under this limited warranty, Purchaser, or the transferee, shall send to Trex, within the warranty period referred to above, a description and photographs of the affected area of the Product, proof of purchase, and if the claim relates to the warranty on stain resistance, proof of compliance with paragraph 1. above, to the following address:

   Trex Company, Inc.
   Customer Relations
   160 Exeter Drive
   Winchester, VA 22603-8605

3. Upon confirmation by an authorized Trex representative of a valid claim hereunder, Trex's sole responsibility shall be, at its option, to either replace the affected item or refund the portion of the purchase price paid by Purchaser for such affected item (not including the cost of its initial installation). Replacement material will be provided that is as close as possible in color, design and quality as the replaced material, but Trex does not guarantee an exact match as colors and design may change.

4. If a valid warranty claim hereunder is made during years eleven (11) through twenty-five (25) after the original purchase for a residential application, recovery will be prorated. If Trex is providing replacement materials, it may elect to replace the percentage listed on page 132 of boards otherwise meeting the requirements for a claim, or if it is refunding the purchase price, it may elect to refund the percentage listed on page 132 of the purchase price of boards otherwise meeting the requirements for a claim.

YEAR OF WARRANTY CLAIM	PERCENTAGE RECOVERY
11	80%
12	80%
13	80%
14	60%
15	60%
16	60%
17	40%
18	40%

YEAR OF WARRANTY CLAIM	PERCENTAGE RECOVERY
19	40%
20	20%
21	20%
22	20%
23	10%
24	10%
25	10%

5. **THIS WARRANTY SHALL NOT COVER AND TREX SHALL NOT BE RESPONSIBLE FOR COSTS AND EXPENSES INCURRED WITH RESPECT TO THE REMOVAL OF AFFECTED PRODUCT OR THE INSTALLATION OF REPLACEMENT MATERIALS, INCLUDING BUT NOT LIMITED TO LABOR AND FREIGHT.**

UNDER NO CIRCUMSTANCES WILL TREX BE LIABLE FOR SPECIAL, INCIDENTAL OR CONSEQUENTIAL DAMAGES, WHETHER SUCH DAMAGES ARE SOUGHT IN CONTRACT, IN TORT (INCLUDING BUT NOT LIMITED TO NEGLIGENCE AND STRICT LIABILITY) OR OTHERWISE, AND TREX'S LIABILITY WITH RESPECT TO PRODUCTS SHALL IN NO EVENT EXCEED THE REPLACEMENT OF SUCH PRODUCTS OR REFUND OF THE PURCHASE PRICE, AS DESCRIBED ABOVE.

Some States or Provinces do not allow the exclusion or limitation of incidental or consequential damages, so the above limitation or exclusion may not apply to you. This warranty gives you specific legal rights, and you may also have other rights that vary from State to State or Province to Province.

Copyright © 2014 Trex Company, Inc.

TREX® LIMITED WARRANTY

Trex Company, Inc. (hereinafter "Trex") warrants to the original purchaser ("Purchaser") that, for the period of time set forth in the following sentence, under normal use and service conditions, TrexÐ products shall be free from material defects in workmanship and materials, and shall not split, splinter, rot or suffer structural damage from termites or fungal decay. The term of such warranty shall be twenty-five (25) years from the date of original purchase for a residential application, and ten (10) years from the date of original purchase for a commercial application. If a defect occurs within the warranty period, Purchaser shall notify Trex in writing and, upon confirmation by an authorized Trex representative of the defect, Trex's sole responsibility shall be, at its option, to either replace the defective item or refund the portion of the purchase price paid by Purchaser for such defective item (not including the cost of its initial installation).

Notwithstanding the foregoing, (a), the term of the warranty for the LED lights and housing for Trex DeckLighting™ shall be seven (7) years, the term of the warranty for the LED lights and housing for Trex LandscapeLighting™ shall be five (5) years, and the term of the warranty for the dimmer, timer and transformer for both shall be three (3) years, in each case provided that a Trex transformer is used (with no warranty on any components if a Trex transformer is not used), and any other parts or accessories shall not be warranted; (b) with respect to hardware for the Trex Surroundings® gate (gate frame, hinges and screws), the term of the warranty shall be five (5) years, (c) with respect to Trex Decorative Balusters, the term of the warranty covering the paint coating shall be ten (10) years, and shall be prorated in the following manner: 100% replacement for the first five (5) years; and 50% replacement for the next five (5) years, and (d) this warranty shall not apply to Trex Elevations® steel deck framing, Trex Reveal® aluminum railing and TrexTrim™ (which each have separate warranties).

For purposes of this warranty, a "residential application" shall refer to an installation of the Product on an individual residence, and a "commercial application" shall refer to any installation of the Product other than on an individual residence.

THIS WARRANTY SHALL NOT COVER AND TREX SHALL NOT BE RESPONSIBLE FOR COSTS AND EXPENSES INCURRED WITH RESPECT TO THE REMOVAL OF DEFECTIVE TREX PRODUCTS OR THE INSTALLATION OF REPLACEMENT MATERIALS, INCLUDING BUT NOT LIMITED TO LABOR AND FREIGHT.

With respect to a residential application, this warranty may be transferred one (1) time, within the five (5) year period beginning from the date of original purchase by the Purchaser, to a subsequent buyer of the property upon which the Trex products were originally installed. With respect to a commercial application, this warranty is freely transferable to subsequent buyers of the property upon which the Trex products were originally installed.

To make a claim under this limited warranty, Purchaser, or the transferee, shall send to Trex, within the warranty period referred to above, a description of the claimed defect and proof of purchase, to the following address:

Trex Company, Inc.
Customer Relations
160 Exeter Drive
Winchester, VA 22603-8605

Trex does not warrant against and is not responsible for, and no implied warranty shall be deemed to cover, any condition attributable to: (1) improper installation of Trex products and/or failure to abide by Trex's installation guidelines, including but not limited to improper gapping; (2) use of Trex products beyond normal use and service conditions, or in an application not recommended by Trex's guidelines and local building codes; (3) movement, distortion, collapse or settling of the ground or the supporting structure on which Trex products are installed; (4) any act of God (such as flooding, hurricane, earthquake, lightning, etc.), environmental condition (such as air pollution, mold, mildew, etc.), staining from foreign substances (such as dirt, grease, oil, etc.), or normal weathering (defined as exposure to sunlight, weather and atmosphere which will cause any colored surface to gradually fade, chalk, or accumulate dirt or stains); (5) variations or changes in color of Trex products; (6) improper handling, storage, abuse or neglect of Trex products by Purchaser, the transferee or third parties; or (7) ordinary wear and tear.

No person or entity is authorized by Trex to make and Trex shall not be bound by any statement or representation as to the quality or performance of Trex products other than as contained in this warranty. This warranty may not be altered or amended except in a written instrument signed by Trex and Purchaser.

UNDER NO CIRCUMSTANCES WILL TREX BE LIABLE FOR SPECIAL, INCIDENTAL OR CONSEQUENTIAL DAMAGES, WHETHER SUCH DAMAGES ARE SOUGHT IN CONTRACT, IN TORT (INCLUDING BUT NOT LIMITED TO NEGLIGENCE AND STRICT LIABILITY) OR OTHERWISE, AND TREX'S LIABILITY WITH RESPECT TO DEFECTIVE PRODUCTS SHALL IN NO EVENT EXCEED THE REPLACEMENT OF SUCH PRODUCTS OR REFUND OF THE PURCHASE PRICE, AS DESCRIBED ABOVE.

Some States or Provinces do not allow the exclusion or limitation of incidental or consequential damages, so the above limitation or exclusion may not apply to you. This warranty gives you specific legal rights, and you may also have other rights that vary from State to State or Province to Province.

Copyright © 2014 Trex Company, Inc.

TREX REVEAL® RAILING LIMITED WARRANTY

Trex Company, Inc. (hereinafter "Trex") warrants to the original purchaser ("Purchaser") that, under normal use and service conditions, Trex Reveal® Railing (the "Product") shall, for a period of twenty-five (25) years from the date of original purchase, be free from material defects in workmanship and materials. If a defect occurs within the warranty period, Purchaser shall notify Trex in writing and, upon confirmation by an authorized Trex representative of the defect, Trex's sole responsibility shall be, at its option, to either replace the defective Product or refund the portion of the purchase price paid by Purchaser for such defective Product (not including the cost of its initial installation).

With respect to installations where the atmosphere is influenced by a body of salt water (or other contaminant conditions), failure to adhere to the cleaning guidelines available at www.trex.com will void this warranty with respect to any condition resulting from such failure.

THIS WARRANTY SHALL NOT COVER AND TREX SHALL NOT BE RESPONSIBLE FOR COSTS AND EXPENSES INCURRED WITH RESPECT TO THE REMOVAL OF DEFECTIVE PRODUCT OR THE INSTALLATION OF REPLACEMENT MATERIALS, INCLUDING BUT NOT LIMITED TO LABOR AND FREIGHT.

This warranty may be transferred one (1) time, within the five (5) year period beginning from the date of original purchase by the Purchaser, to a subsequent buyer of the property upon which the Product was originally installed.

To make a claim under this limited warranty, Purchaser, or the transferee, shall send to Trex, within the warranty period referred to above, a description of the claimed defect and proof of purchase, to the following address:

Trex Company, Inc.
Customer Relations
160 Exeter Drive
Winchester, VA 22603-8605

Trex does not warrant against and is not responsible for, and no implied warranty shall be deemed to cover, any condition attributable to: (1) improper installation of the Product; (2) use of the Product beyond normal use and service conditions, or in an application not recommended by Trex's guidelines and local building codes; (3) movement, distortion, collapse or settling of the ground or the supporting structure on which the Product is installed; (4) damages attributable to fire, violent storms, earthquake or other Acts of God, accidents, vandalism, or other casualties, impact of objects, or exposure to atmospheric pollutants or conditions other than natural weather processes, (5) improper handling, storage, abuse or neglect of the Product by Purchaser, the transferee or third parties; or (6) ordinary wear and tear.

No person or entity is authorized by Trex to make and Trex shall not be bound by any statement or representation as to the quality or performance of Trex products other than as contained in this warranty. This warranty may not be altered or amended except in a written instrument signed by Trex and Purchaser

UNDER NO CIRCUMSTANCES WILL TREX BE LIABLE FOR SPECIAL, INCIDENTAL OR CONSEQUENTIAL DAMAGES, WHETHER SUCH DAMAGES ARE SOUGHT IN CONTRACT, IN TORT (INCLUDING BUT NOT LIMITED TO NEGLIGENCE AND STRICT LIABILITY) OR OTHERWISE, AND TREX'S LIABILITY WITH RESPECT TO DEFECTIVE PRODUCTS SHALL IN NO EVENT EXCEED THE REPLACEMENT OF SUCH PRODUCTS OR REFUND OF THE PURCHASE PRICE, AS DESCRIBED ABOVE.

Some States or Provinces do not allow the exclusion or limitation of incidental or consequential damages, so the above limitation or exclusion may not apply to you. This warranty gives you specific legal rights, and you may also have other rights that vary from State to State or Province to Province.

Copyright © 2014 Trex Company, Inc.

NOTES

NOTES

NOTES

decking & railing color palette

TREX TRANSCEND® DECKING

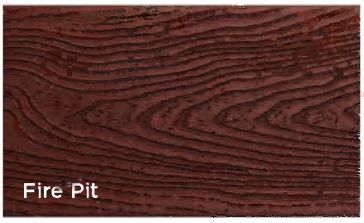

TREX ENHANCE® DECKING

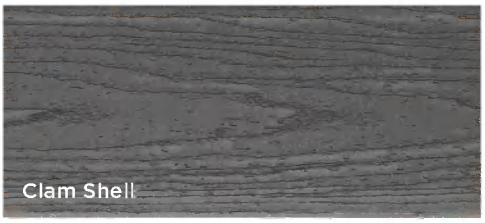

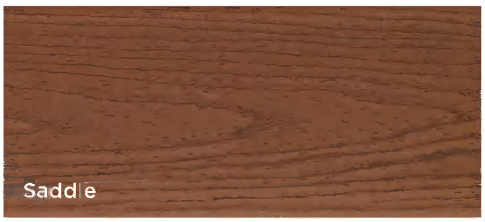

TREX SELECT® DECKING

TREX TRANSCEND RAILING

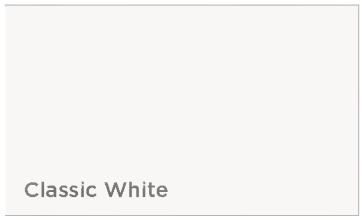

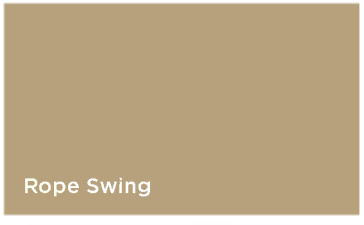

TREX SELECT RAILING

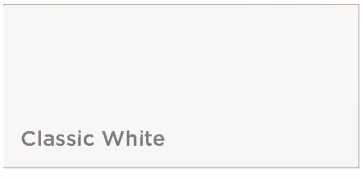

TREX REVEAL® ALUMINUM RAILING

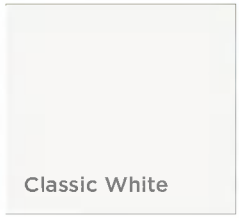

TREX® OUTDOOR LIGHTING™

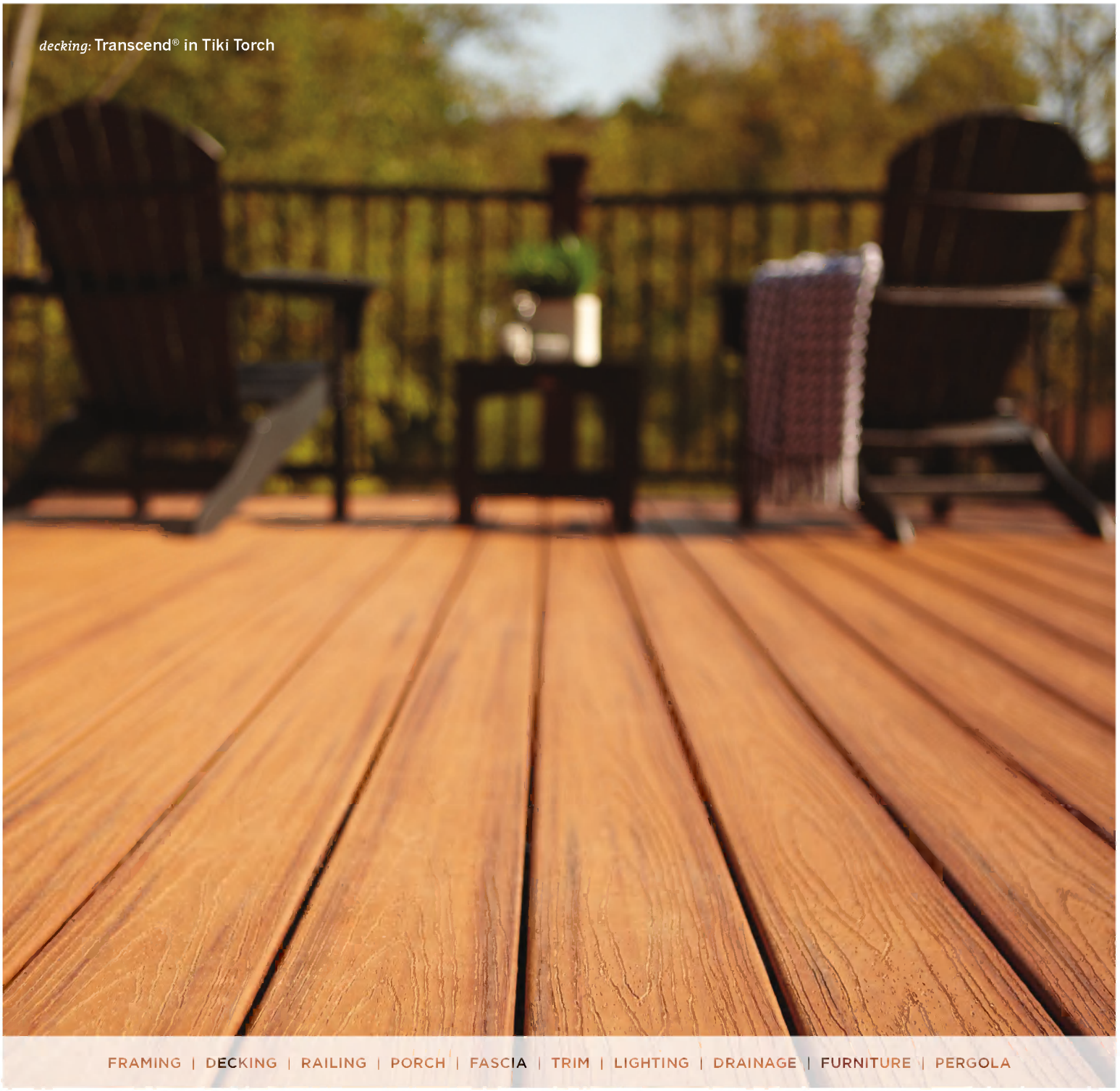

FRAMING | DECKING | RAILING | PORCH | FASCIA | TRIM | LIGHTING | DRAINAGE | FURNITURE | PERGOLA

FIND US ON

Trex®

OUTDOOR LIVING. ELEVATED.

Visit **trex.com** or call **1-800-BUY-TREX**

© 2014 Trex Company, Inc. All rights reserved. Trex®, the Trex logo, Trex Transcend®, Trex Enhance®, Trex Select®, Trex Hideaway®, TrexTrim™, Trex Reveal®, Trex Elevations®, Trex® RainEscape®, Trex® Outdoor Lighting™, Trex® Pergola™ and TrexPro® are either federally registered trademarks, trademarks or trade dress of Trex Company, Inc., Winchester, Virginia.